ARTE LAMP

ASSEMBLY INSTRUCTION

A9477AP-1WG CE

ИНСТРУКЦИЯ

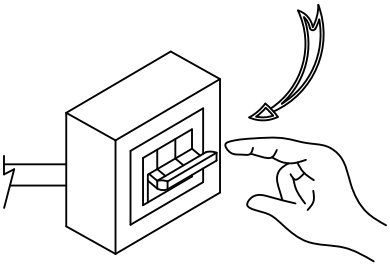

OFF 1

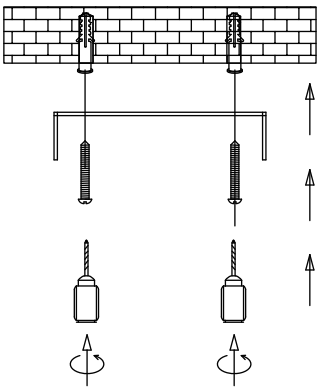

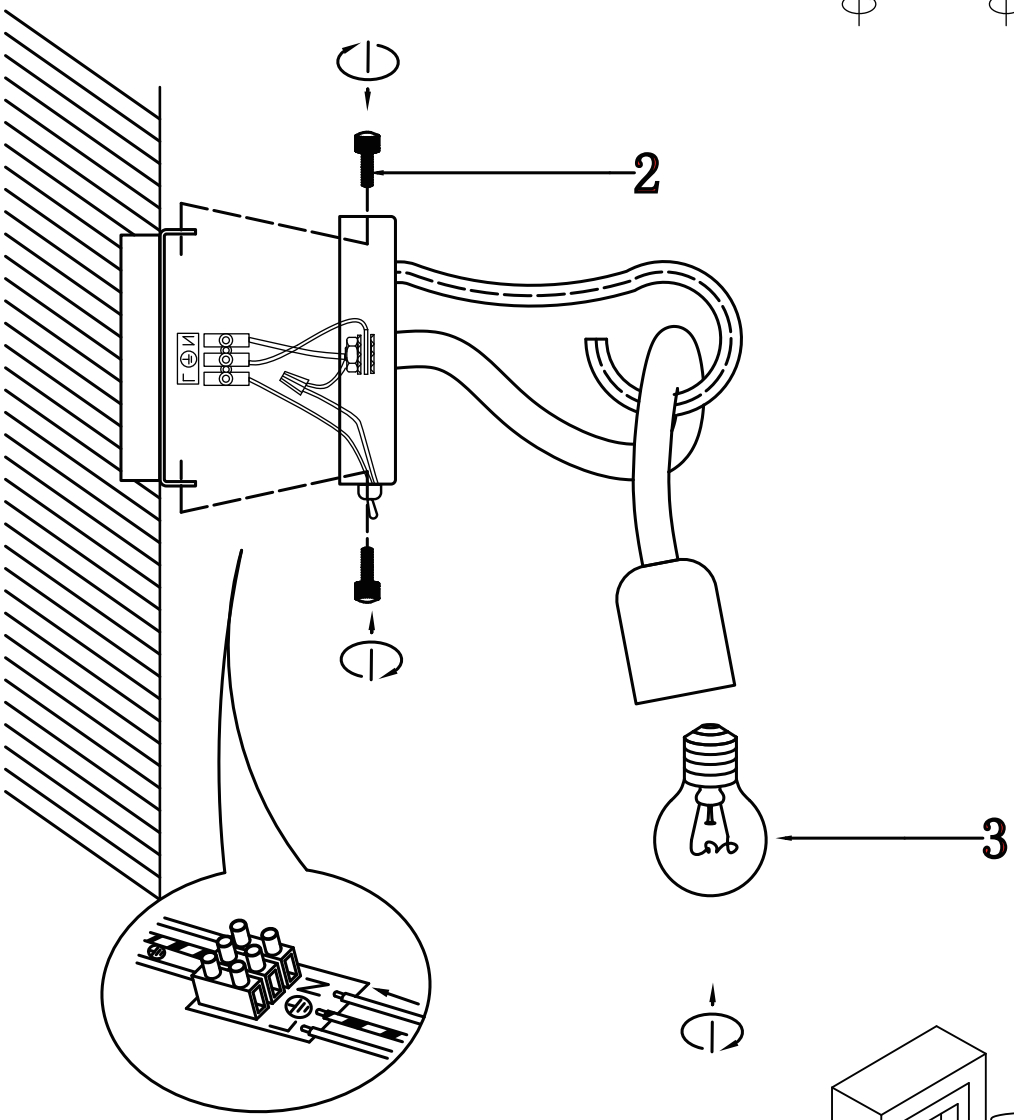

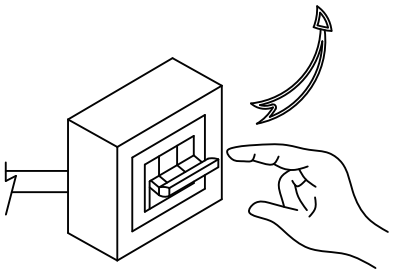

ON 4