ARTE LAMP

ASSEMBLY INSTRUCTION

A9347SP-3BK

ИНСТРУКЦИЯ

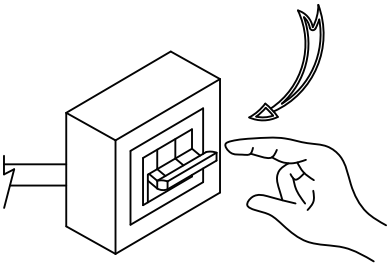

OFF 1

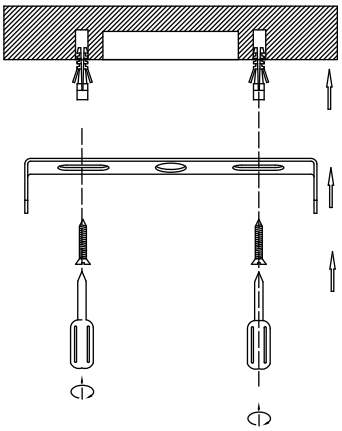

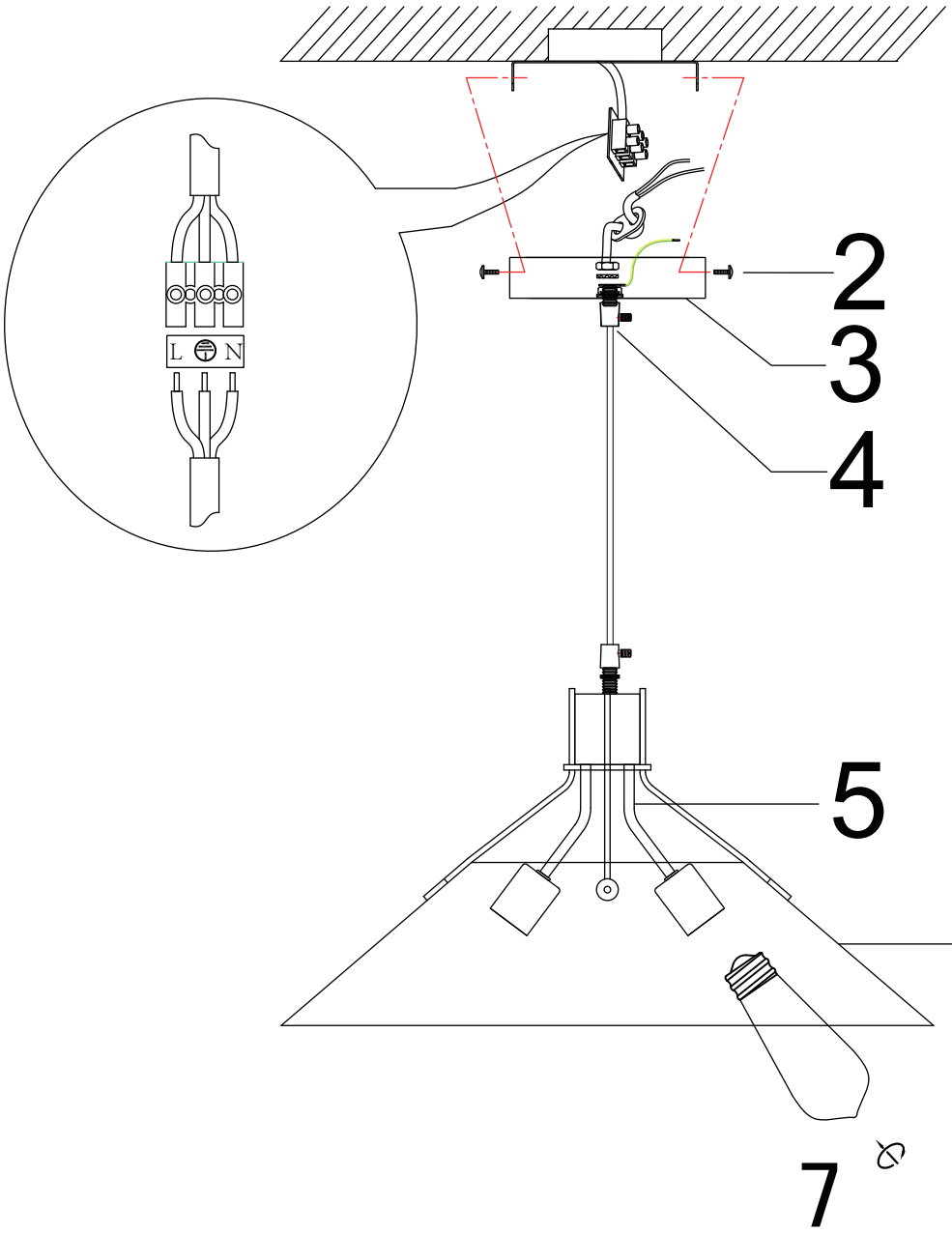

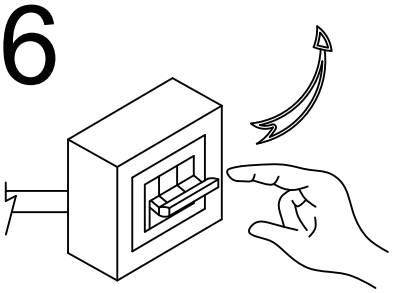

ON 8