ARTE LAMP

# ASSEMBLY INSTRUCTION

# ИНСТРУКЦИЯ

A
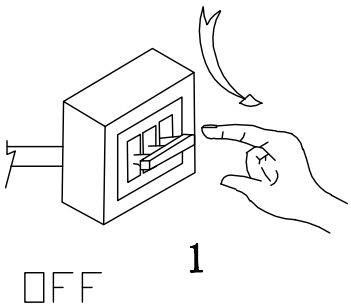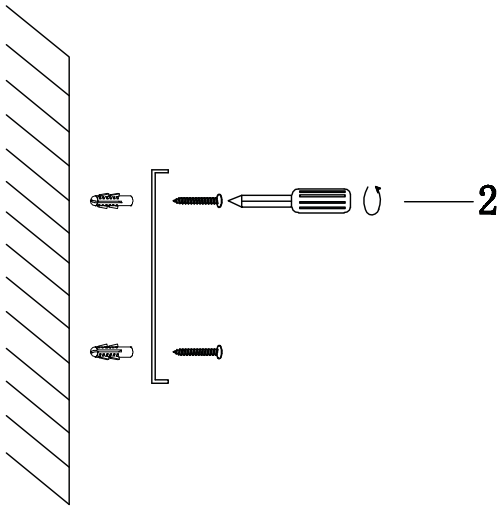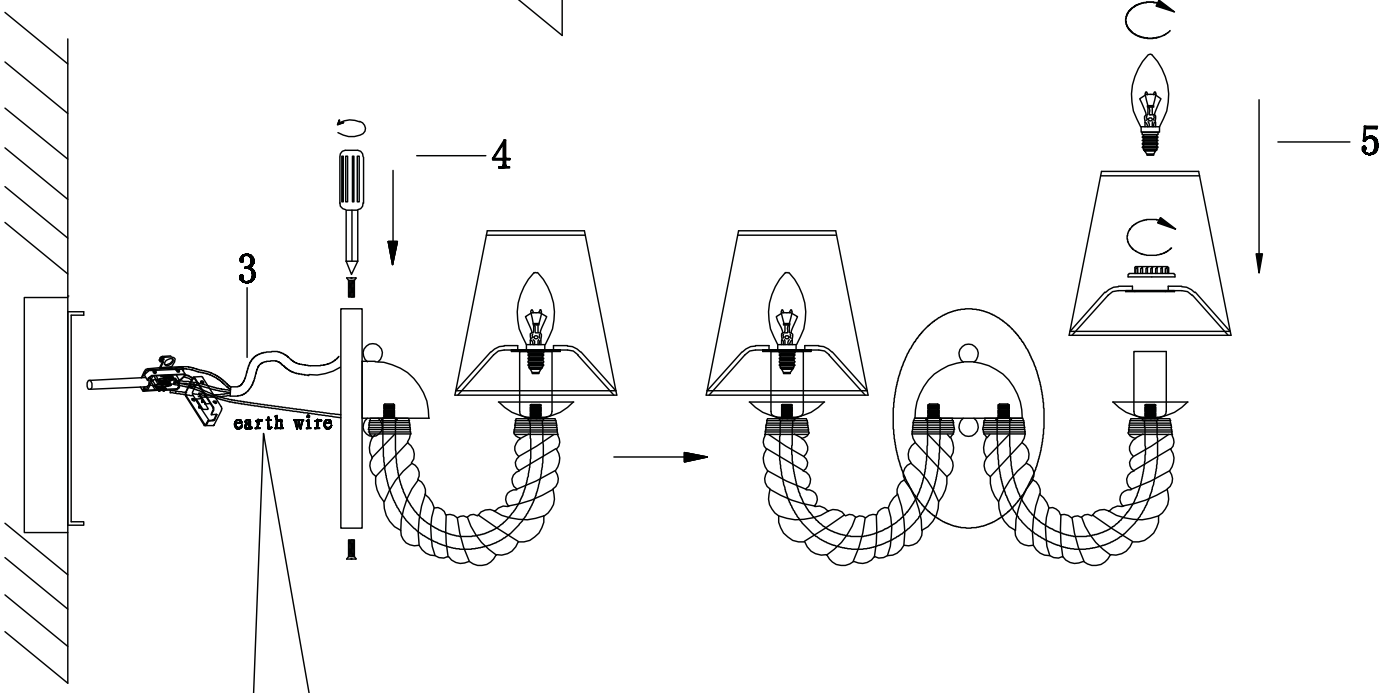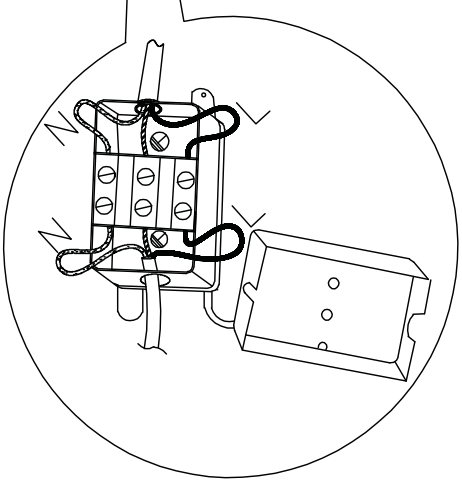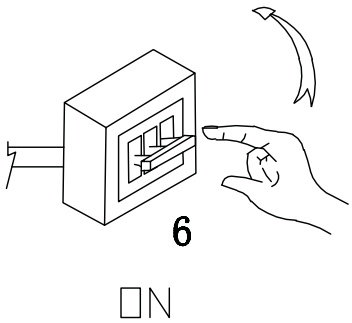
A8958AP-2BR