ARTE LAMP

ASSEMBLY INSTRUCTION

ИНСТРУКЦИЯ

A

A8173SP-1

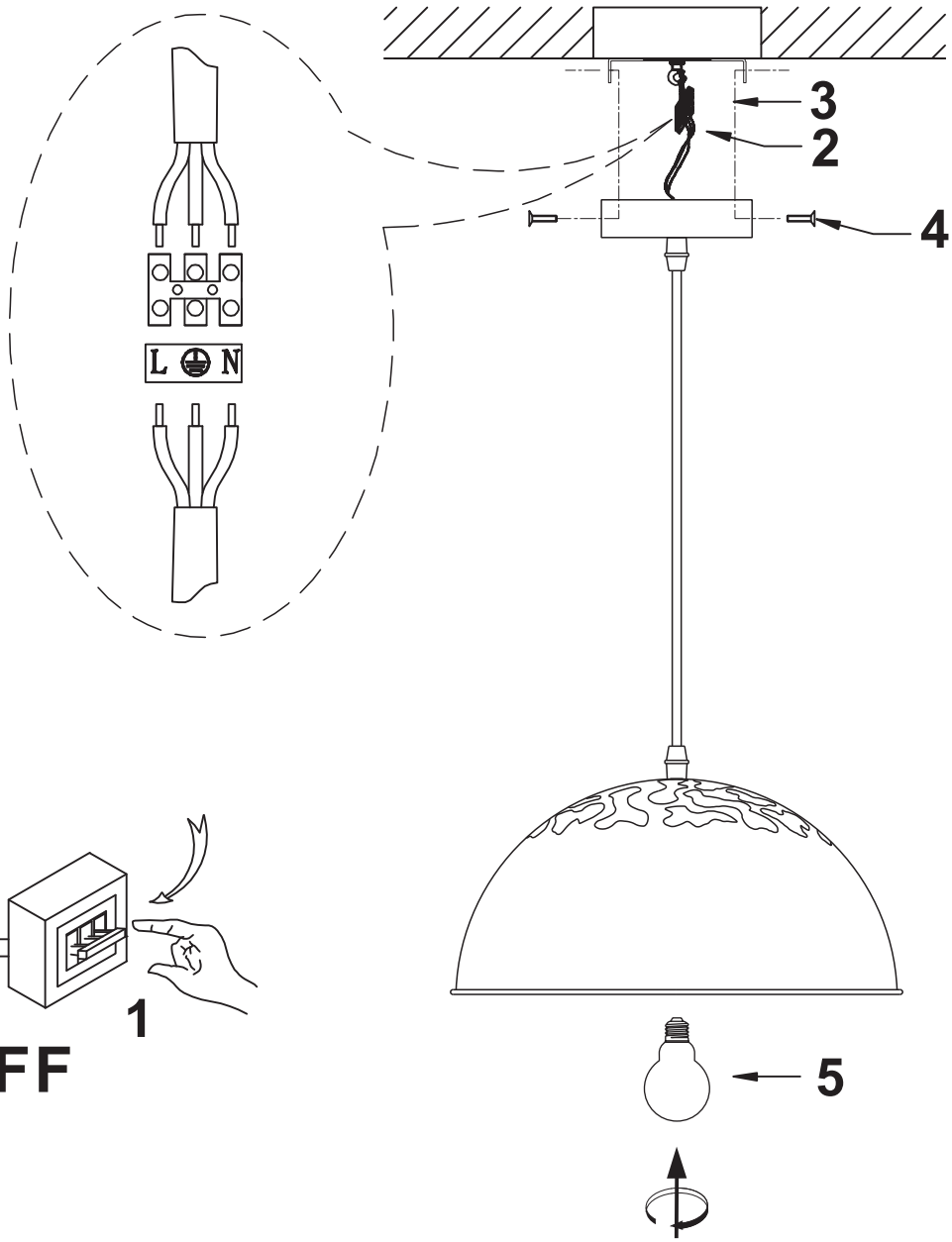

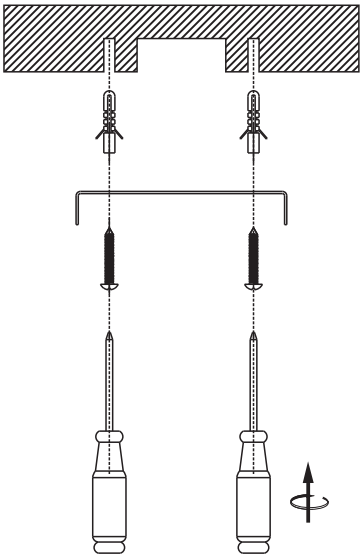

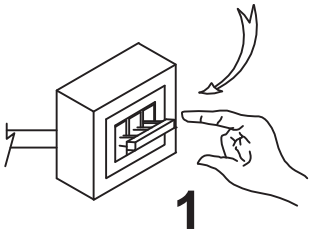

OFF

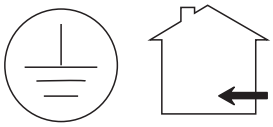

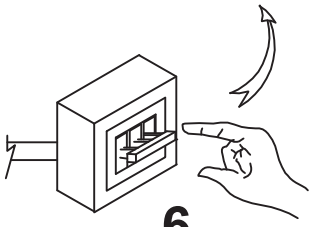

ON