ARTE LAMP

ASSEMBLY INSTRUCTION

A7846LM-2AB
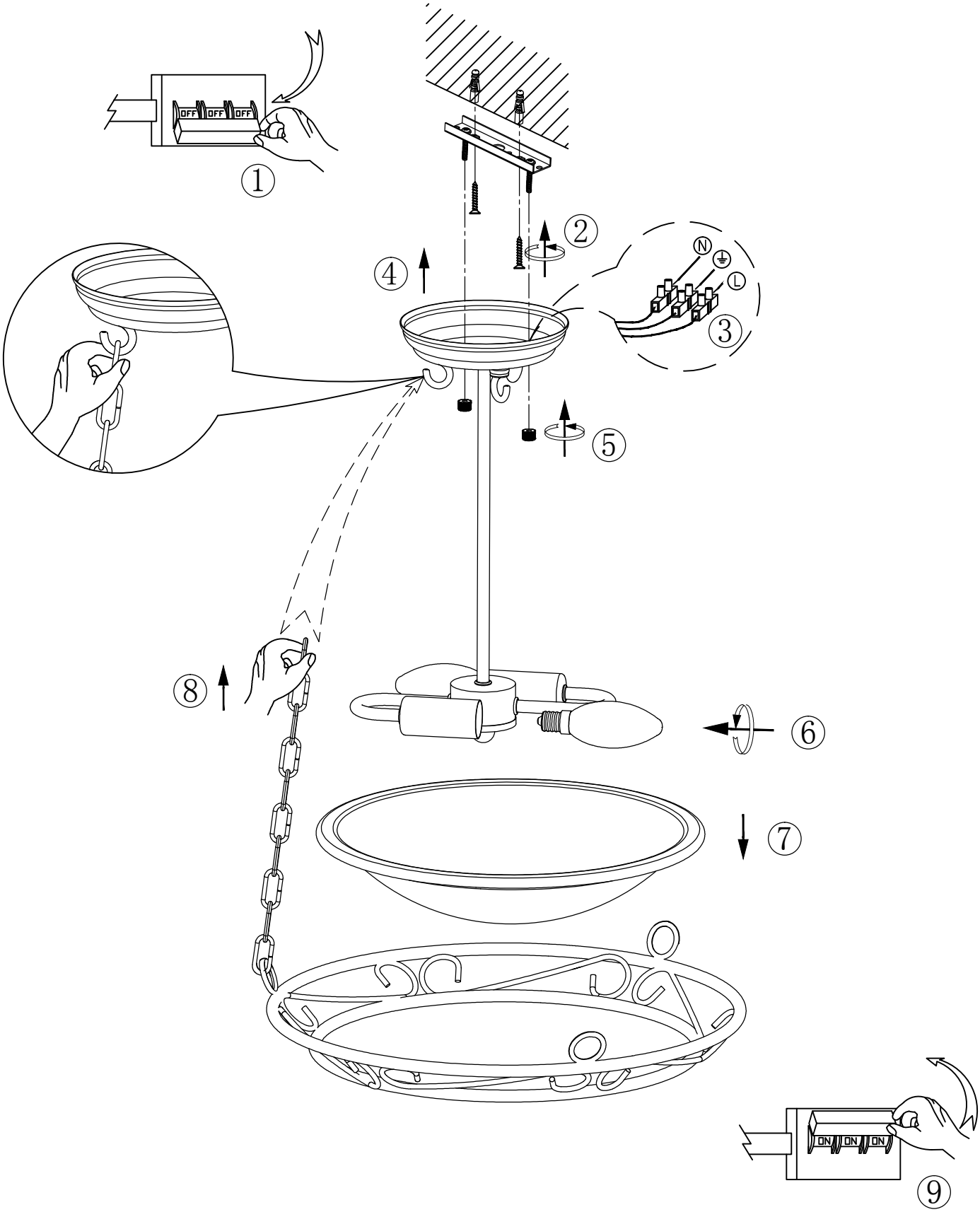
ИНСТРУКЦИЯ