ARTE LAMP

ASSEMBLY INSTRUCTION

A7171SP-1SM

CE

ИНСТРУКЦИЯ

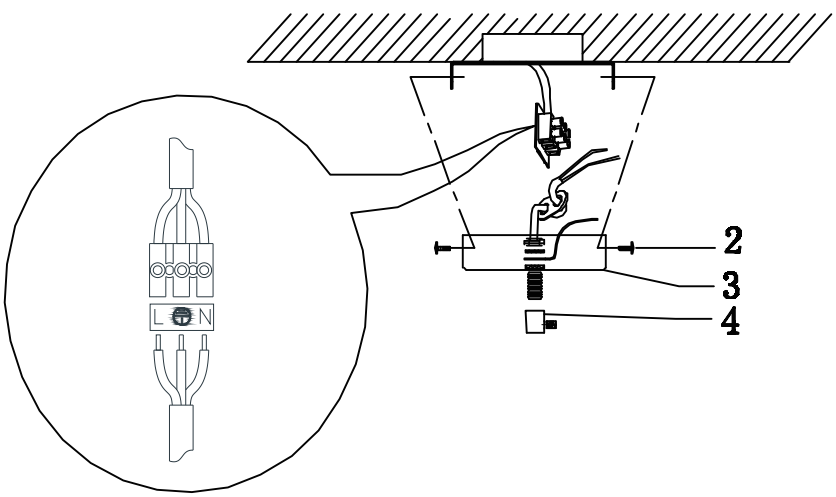

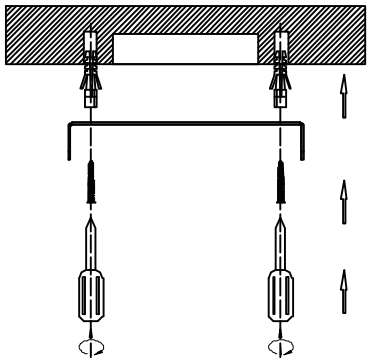

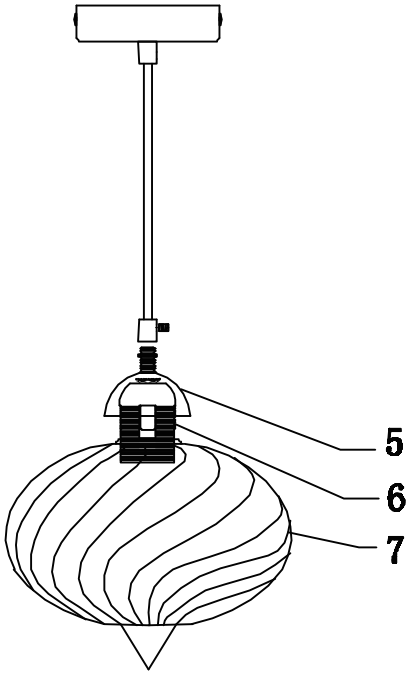

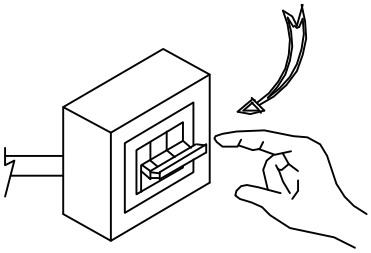

OFF 1

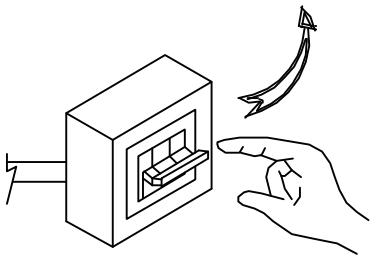

ON 8