ARTE LAMP

ASSEMBLY INSTRUCTION

A7171SP-1AM

CE

ИНСТРУКЦИЯ

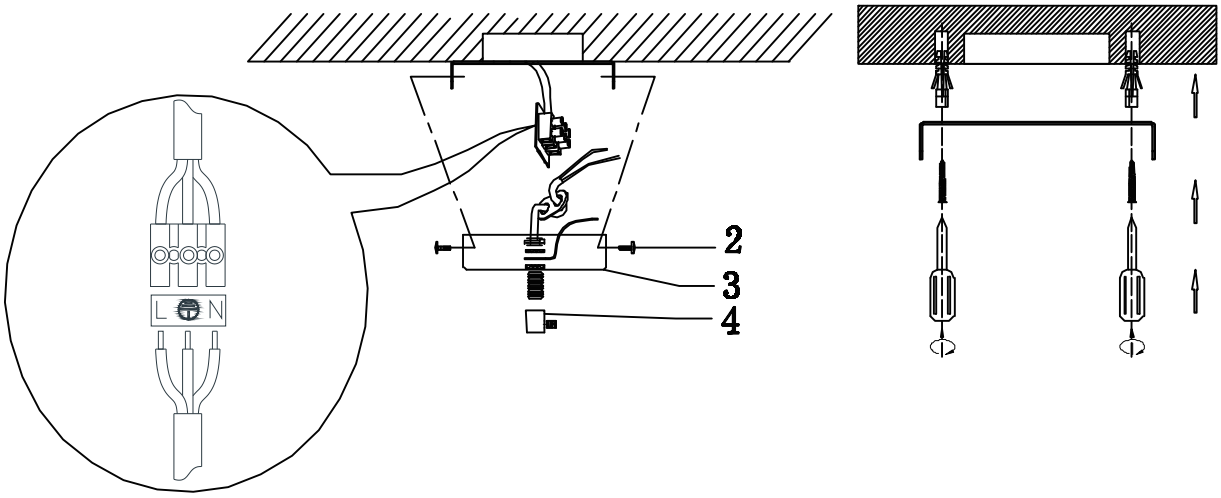

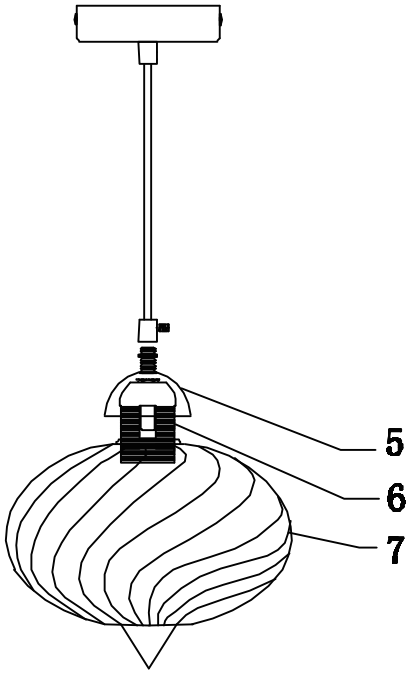

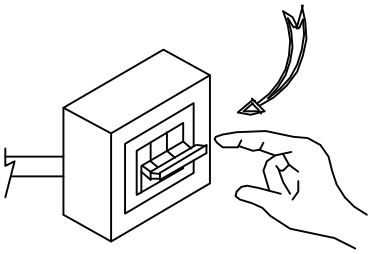

OFF 1

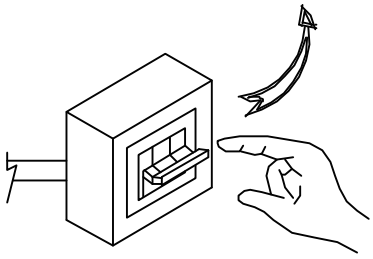

ON 8