ARTE LAMP

ASSEMBLY INSTRUCTION
ИНСТРУКЦИЯ

A
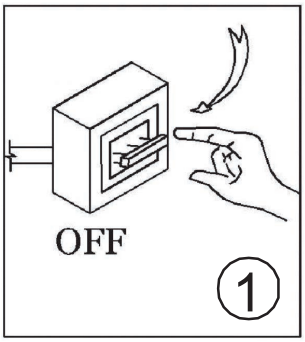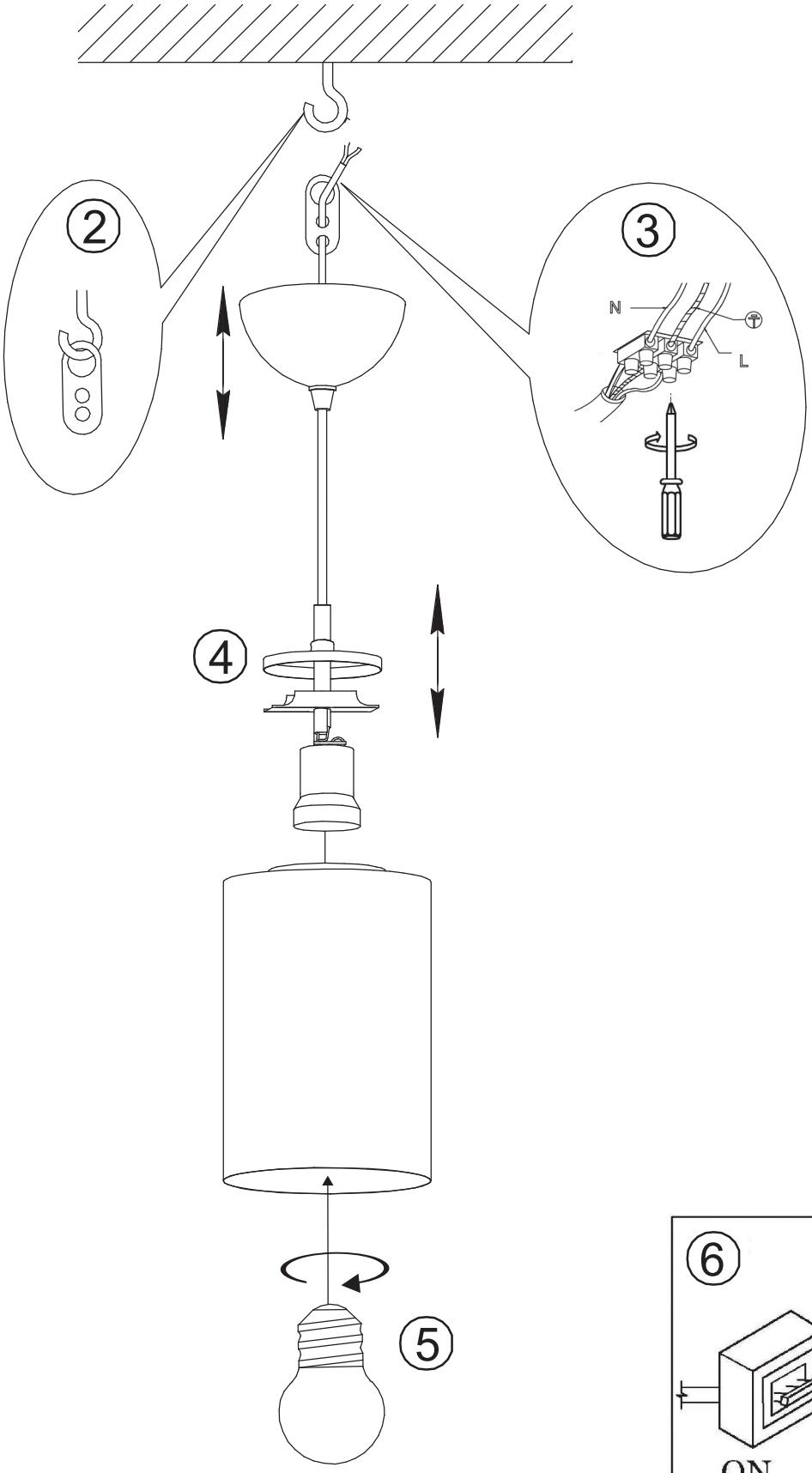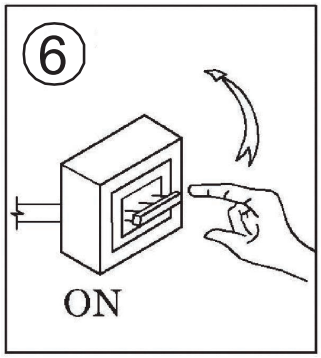
A6710SP-1WH