ARTE LAMP

ASSEMBLY INSTRUCTION

ИНСТРУКЦИЯ

A

A6680SP-1BK

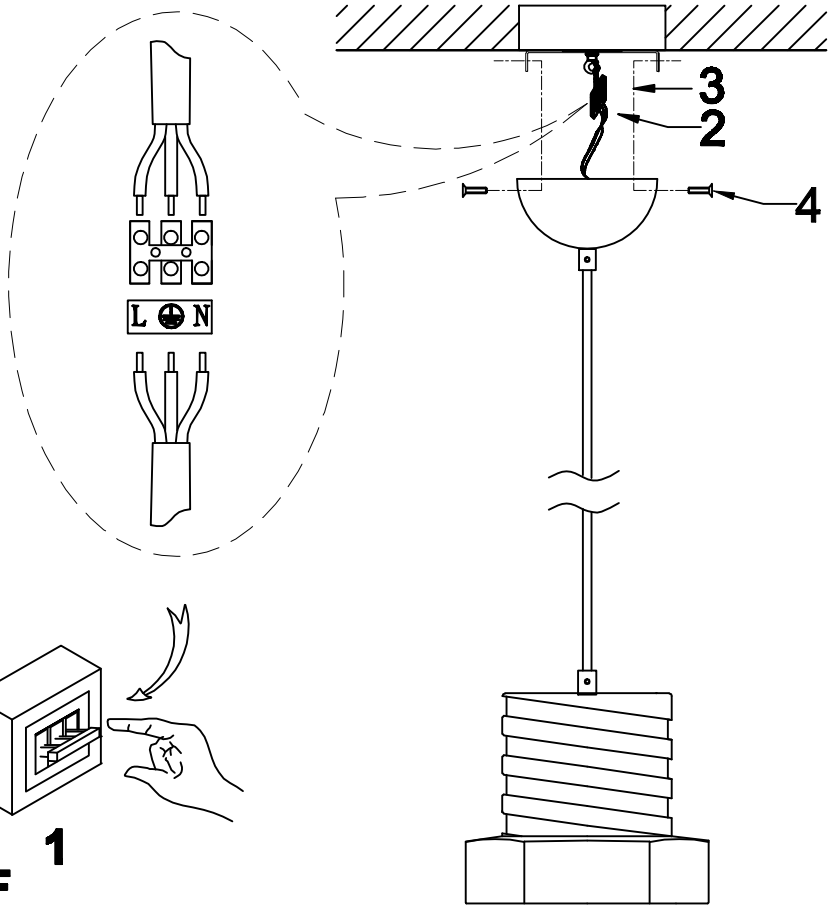

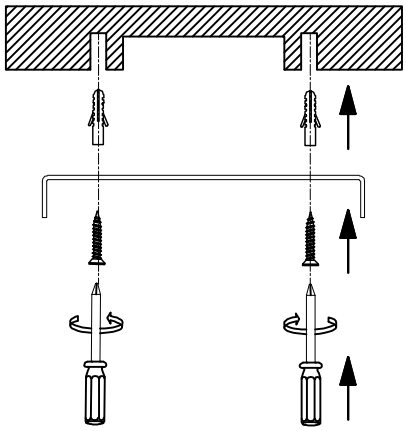

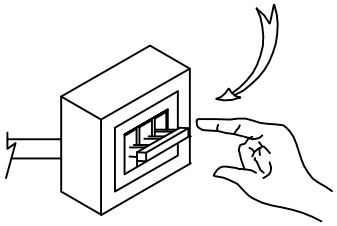

OFF 1

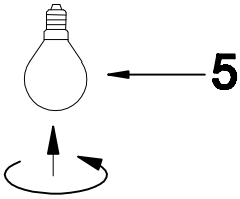

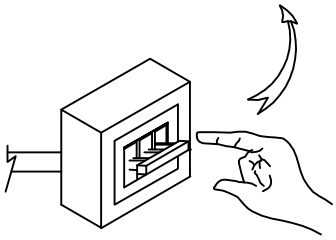

ON 6