ARTE LAMP

ASSEMBLY INSTRUCTION

A6280SP-1WH

ИНСТРУКЦИЯ

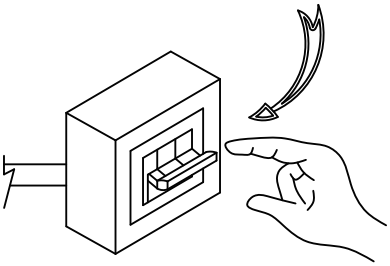

OFF 1

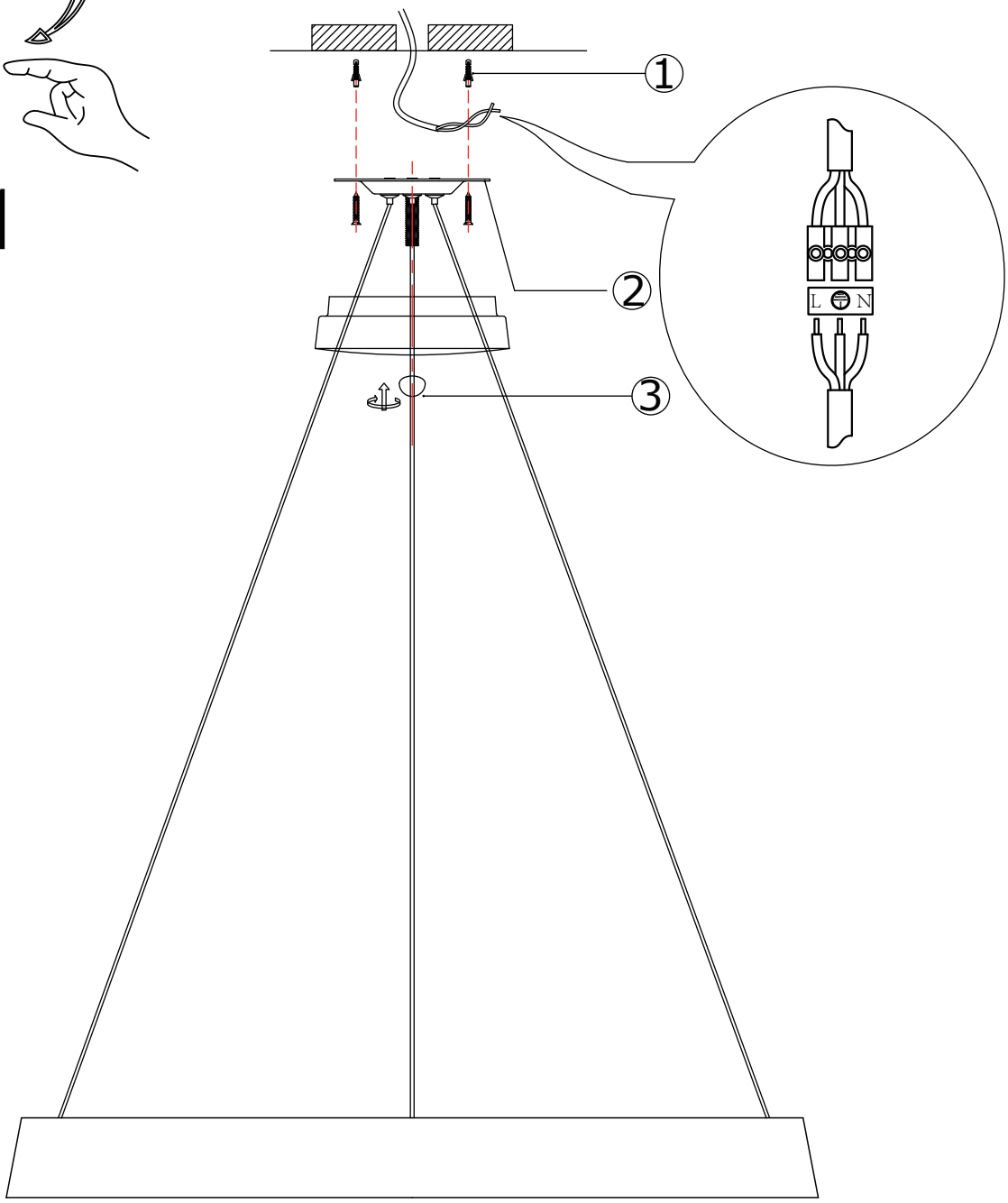

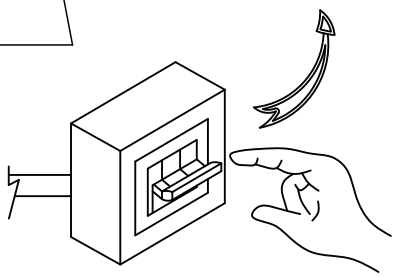

ON 4