ARTE LAMP

ASSEMBLY INSTRUCTION

ИНСТРУКЦИЯ
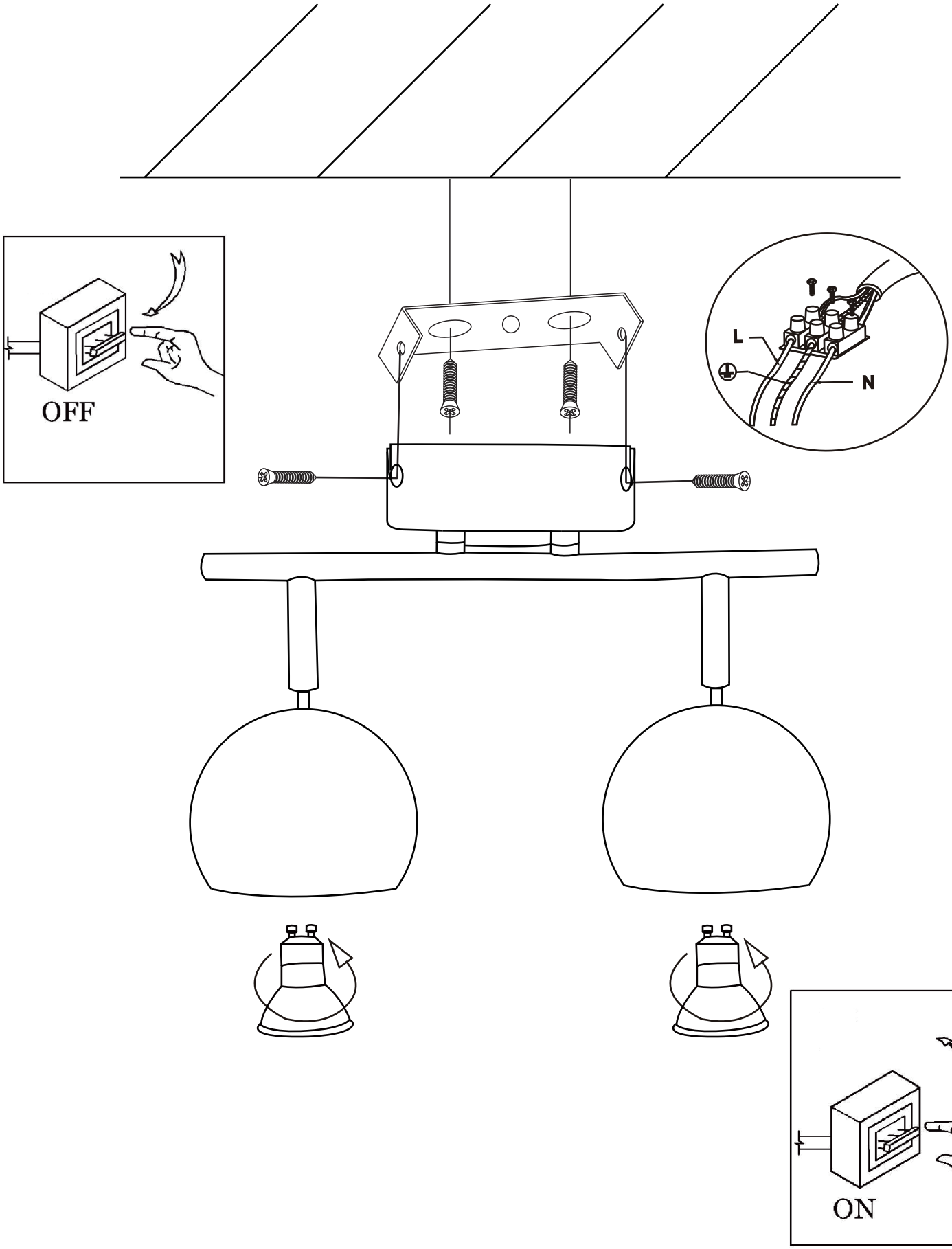
A6253PL-2AB