ARTE LAMP

ASSEMBLY INSTRUCTION

A4290SP-7BK

CE

ИНСТРУКЦИЯ

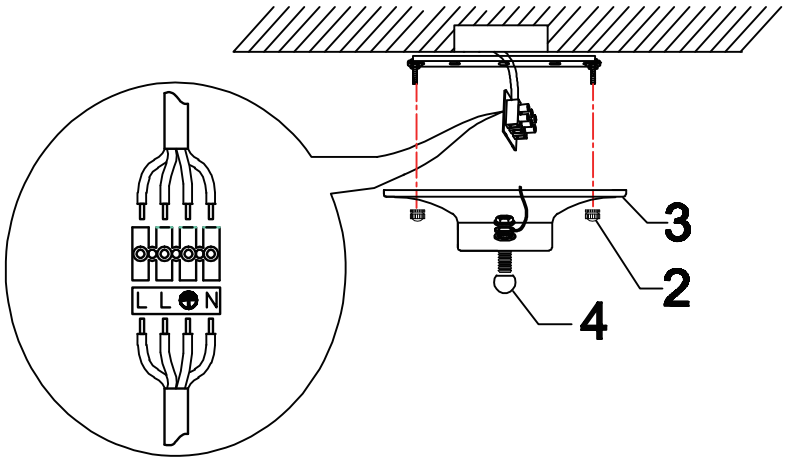

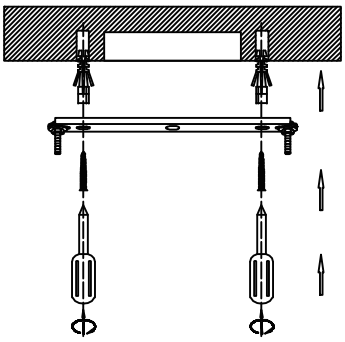

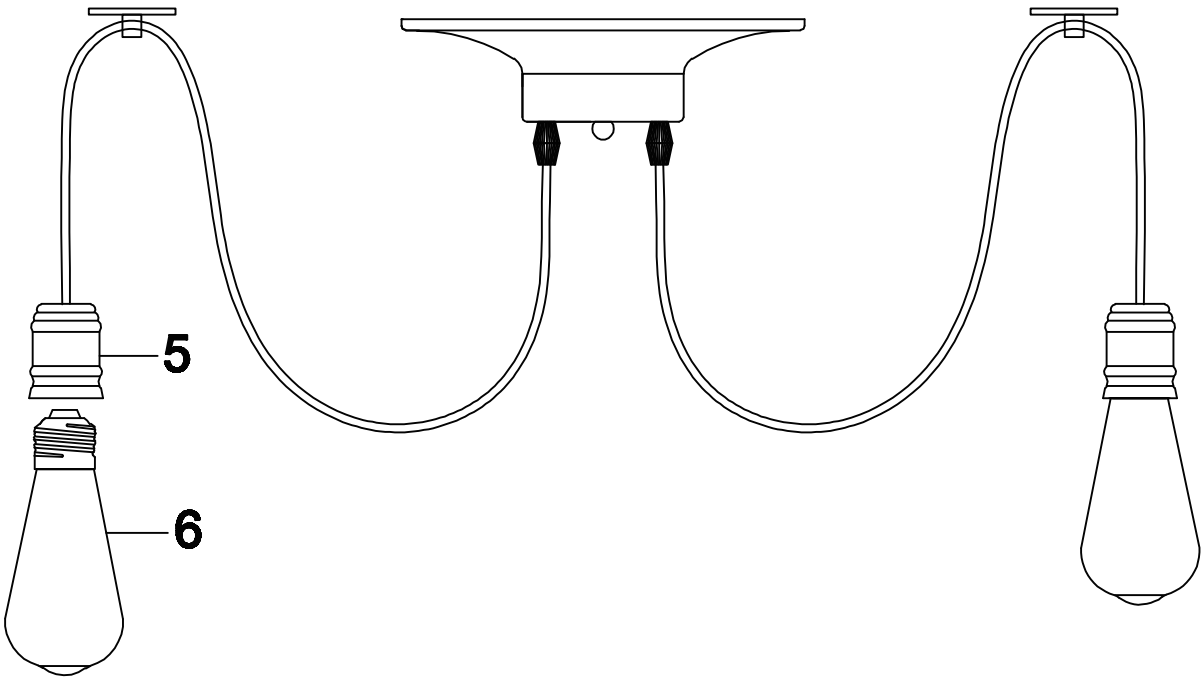

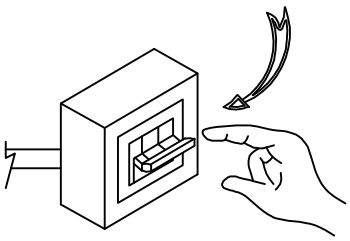

OFF 1

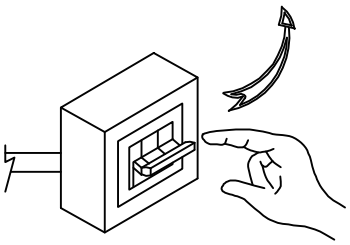

ON 8