ARTE LAMP

ASSEMBLY INSTRUCTION

A4289LM-3WH

ИНСТРУКЦИЯ

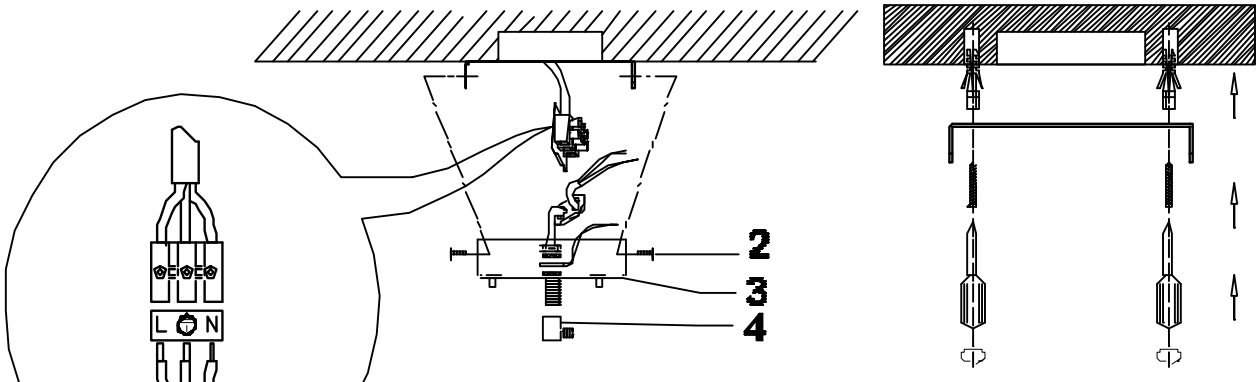

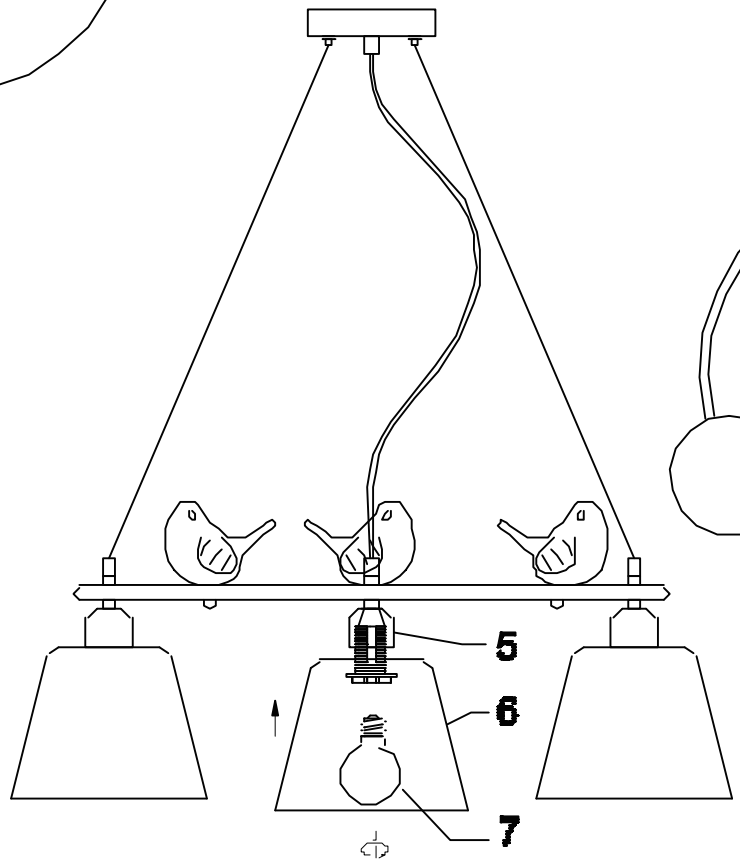

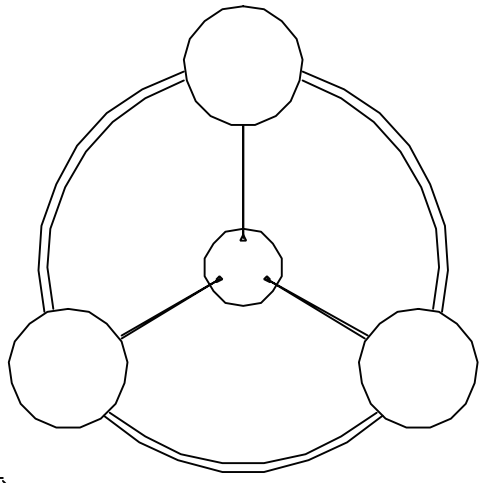

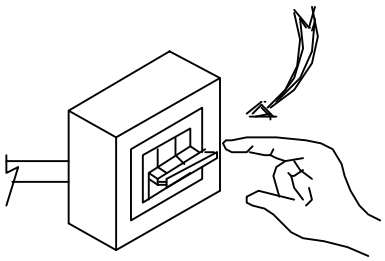

OFF 1

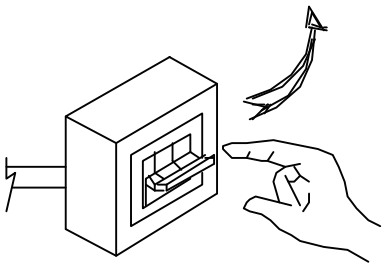

ON 8