ARTE LAMP

ASSEMBLY INSTRUCTION

A4033PL-4AB

CE

ИНСТРУКЦИЯ

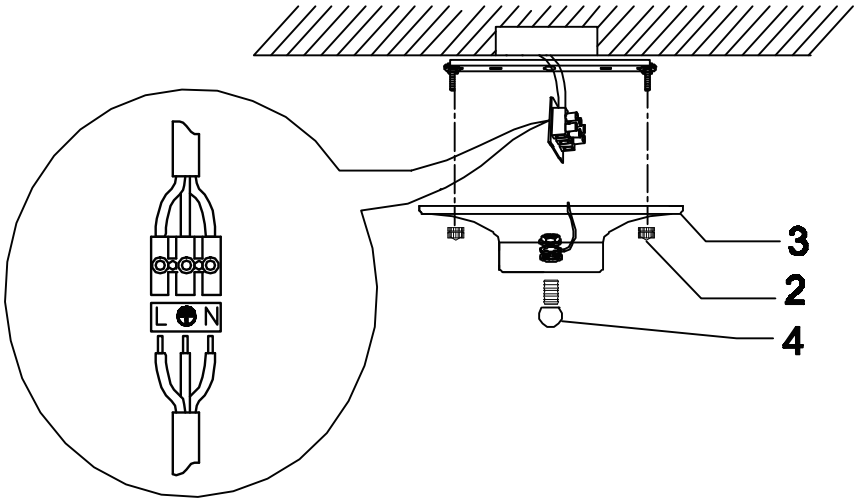

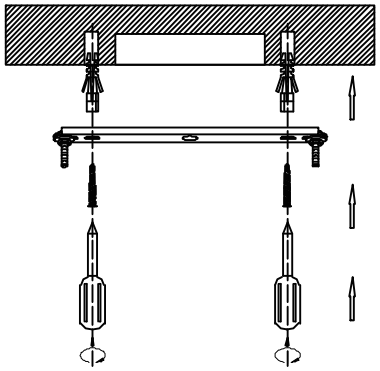

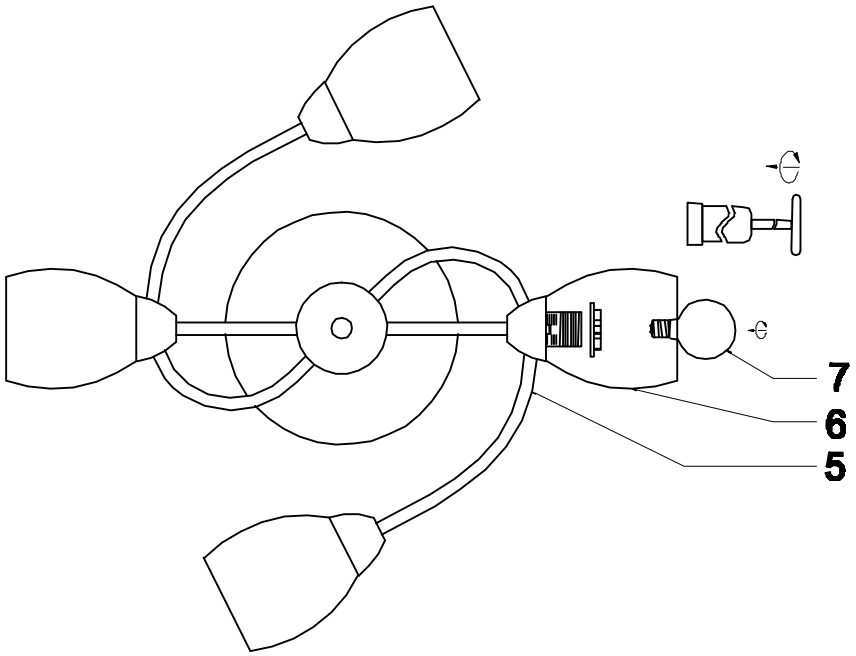

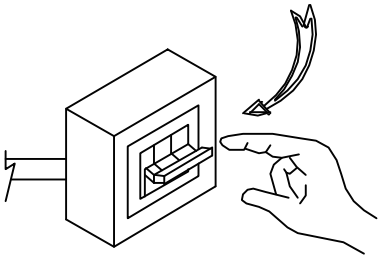

OFF 1

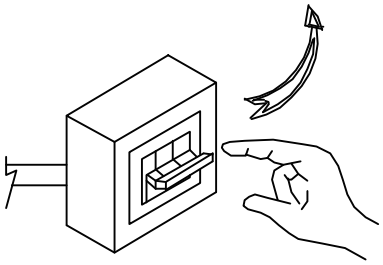

ON 8