ARTE LAMP

ASSEMBLY INSTRUCTION

A4010SP-1WH
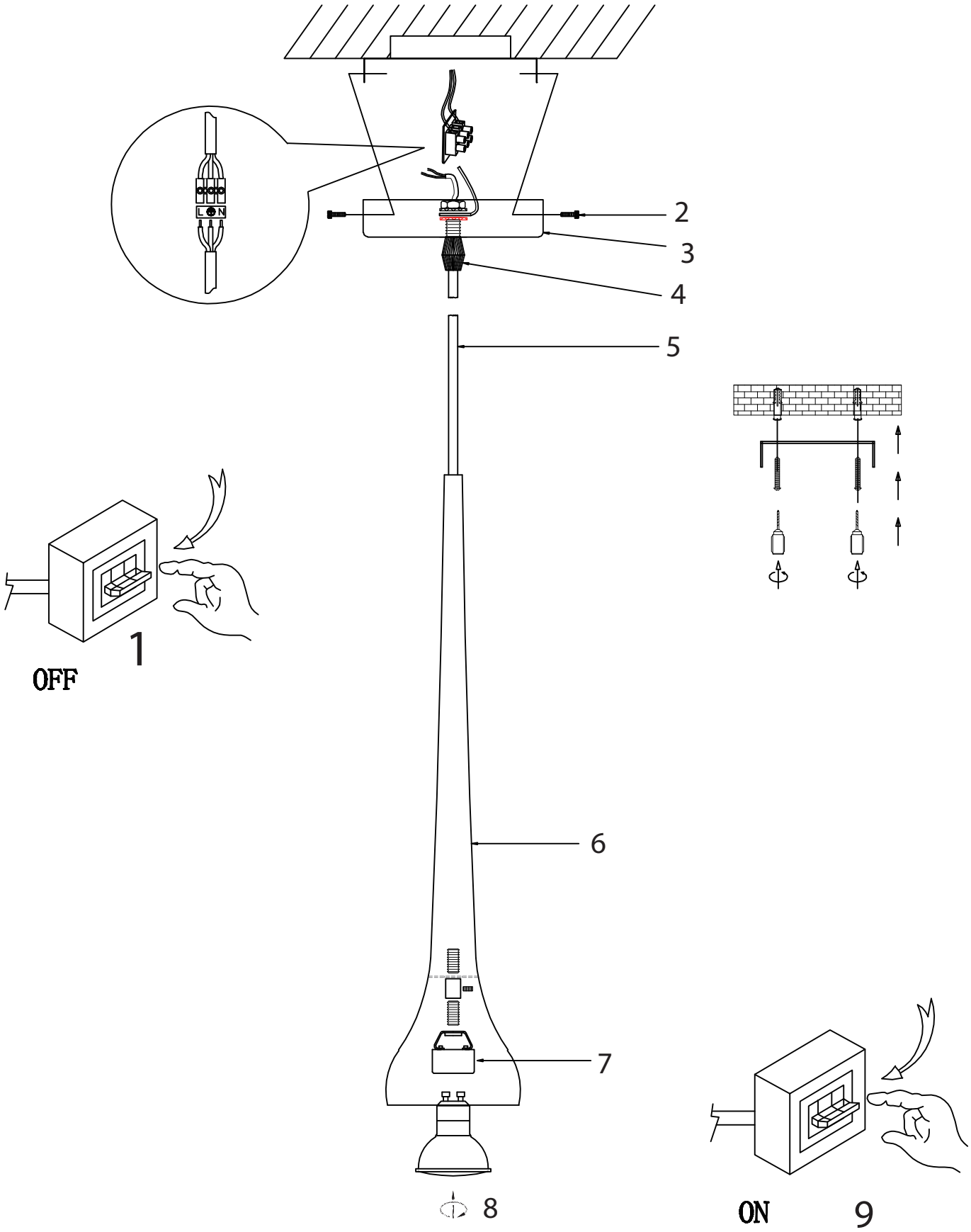
ИНСТРУКЦИЯ