ARTE LAMP

ASSEMBLY INSTRUCTION

ИНСТРУКЦИЯ
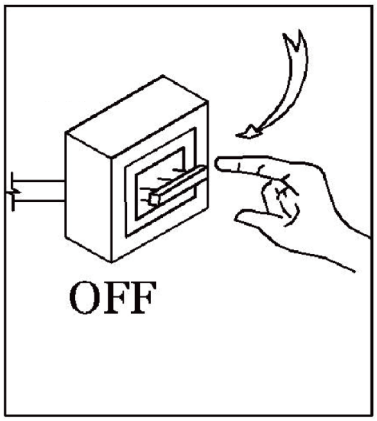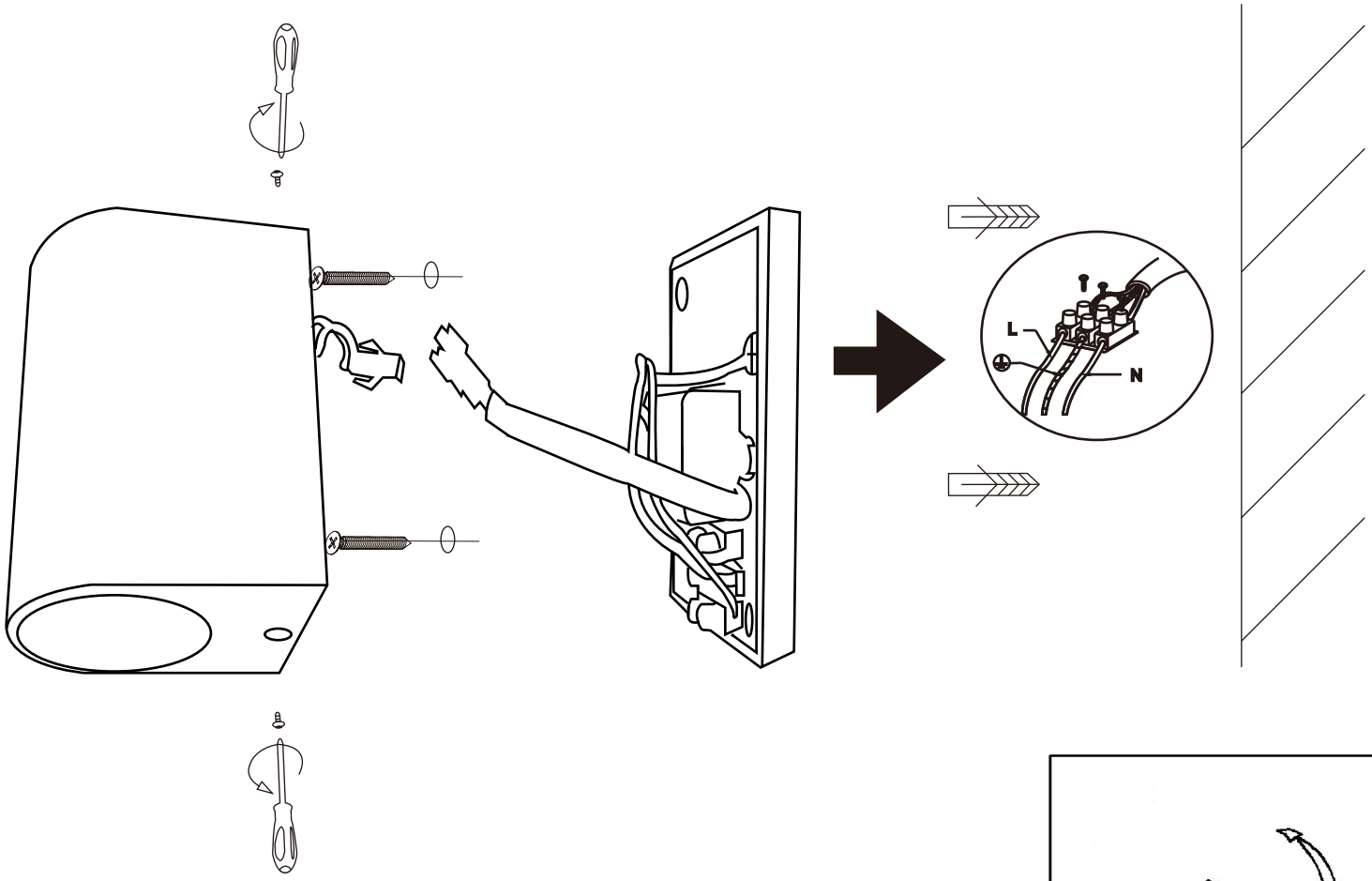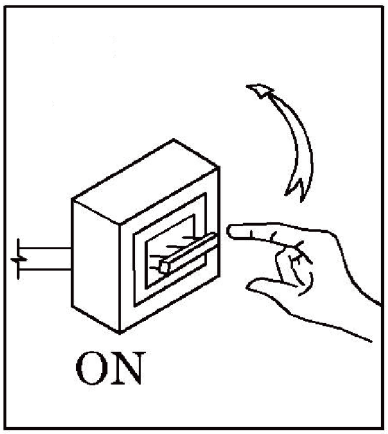
A3502AL-2WG
A3502AL-2RI