ARTE LAMP

ASSEMBLY INSTRUCTION

ИНСТРУКЦИЯ A3152AL-1BN
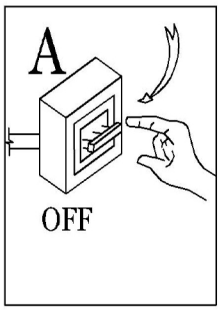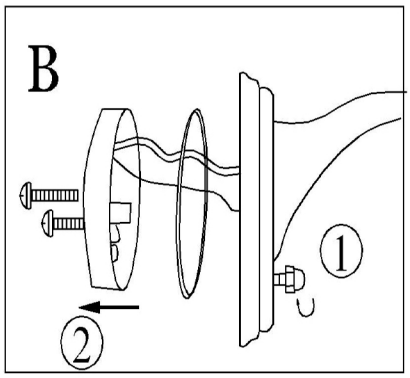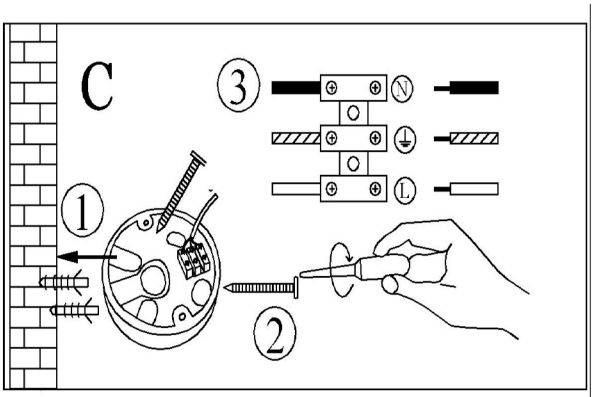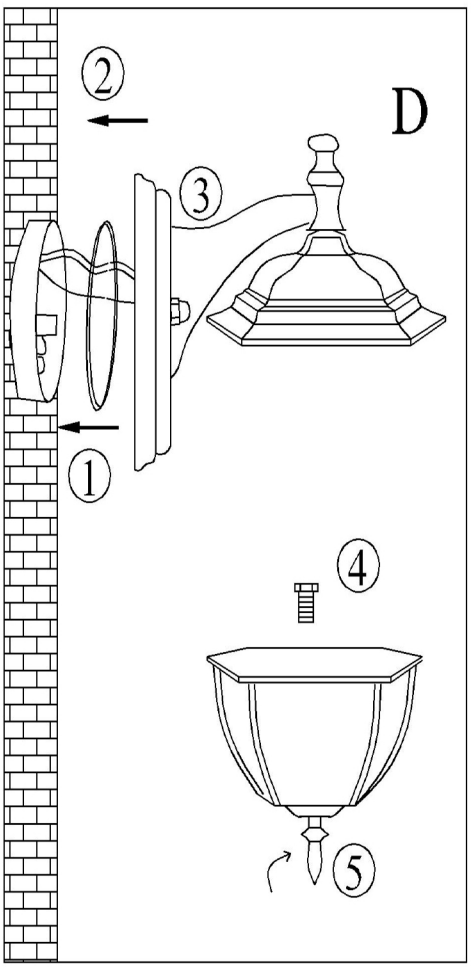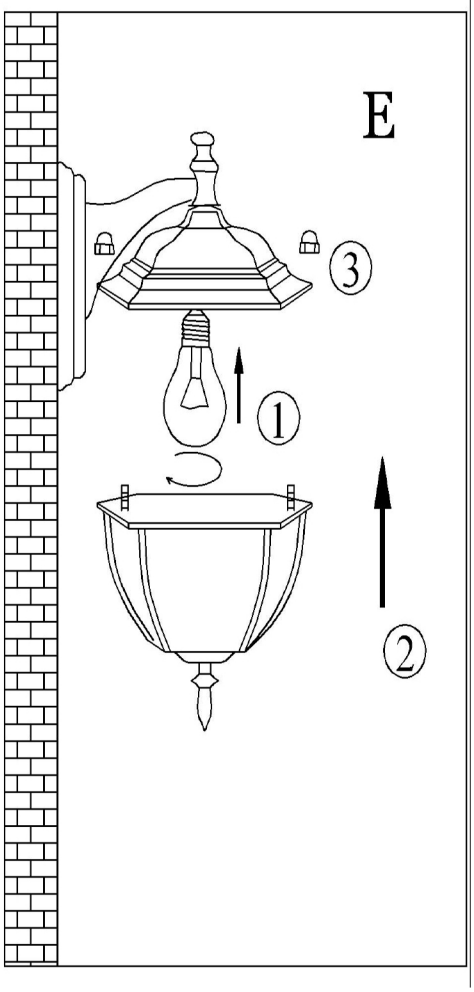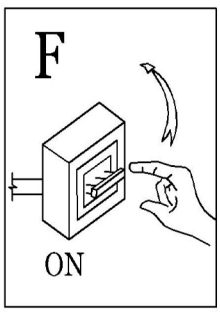
A