ARTE LAMP

ASSEMBLY INSTRUCTION

ИНСТРУКЦИЯ

A
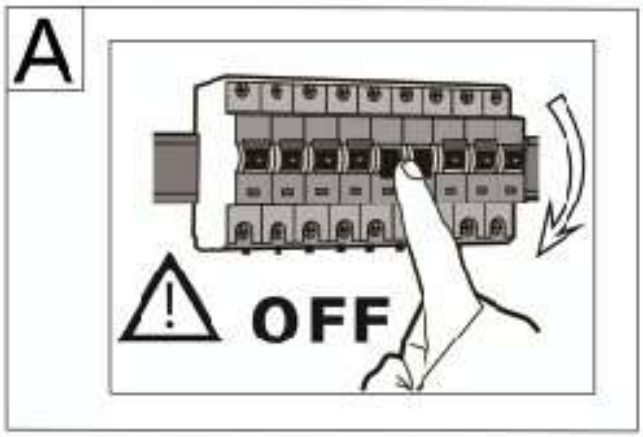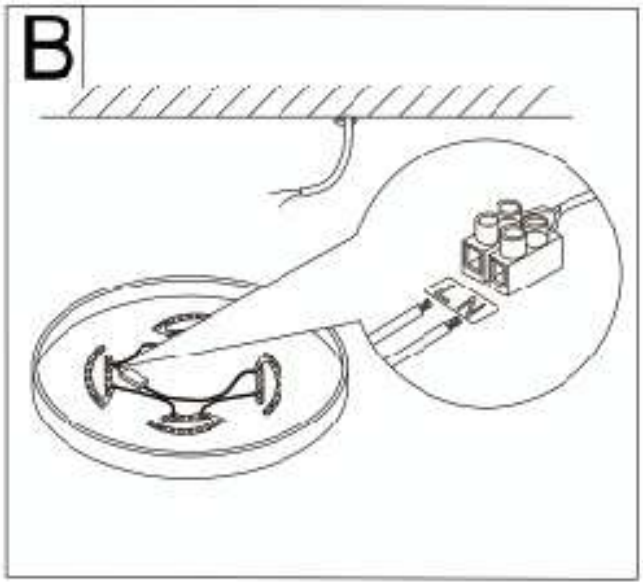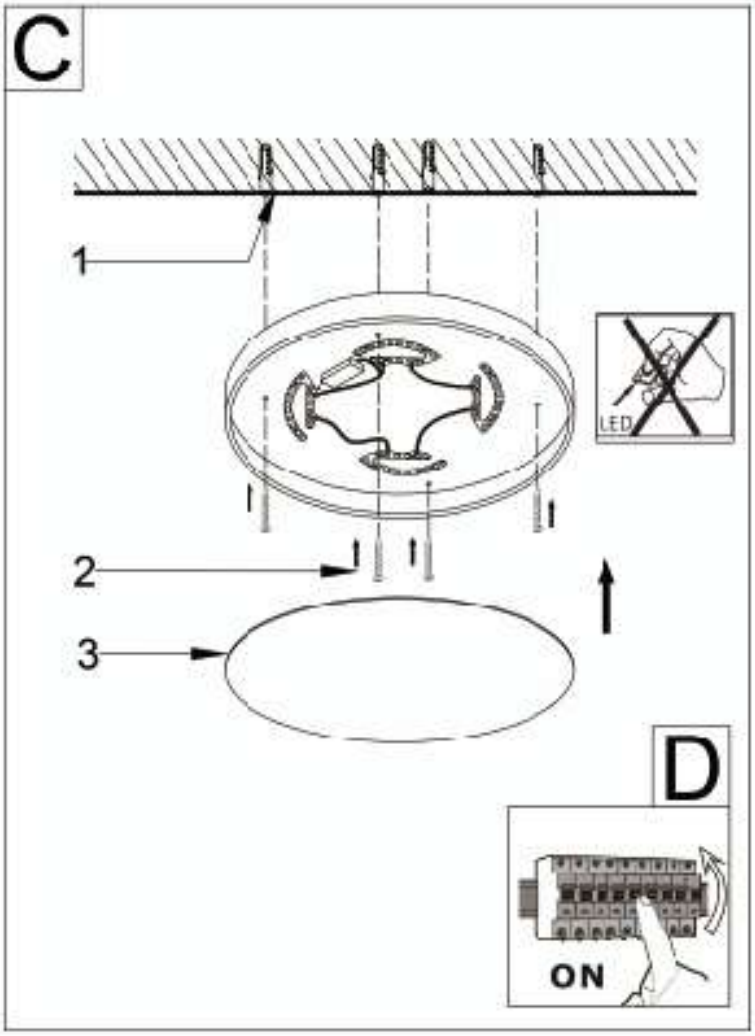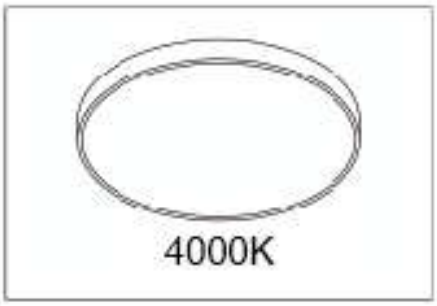
A2686PL-35WH