ARTE LAMP

ASSEMBLY INSTRUCTION

A2146AP-1GA

ИНСТРУКЦИЯ

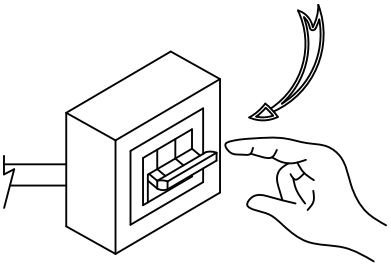

OFF 1

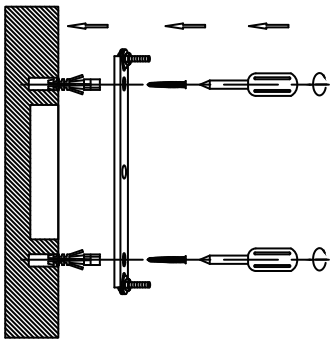

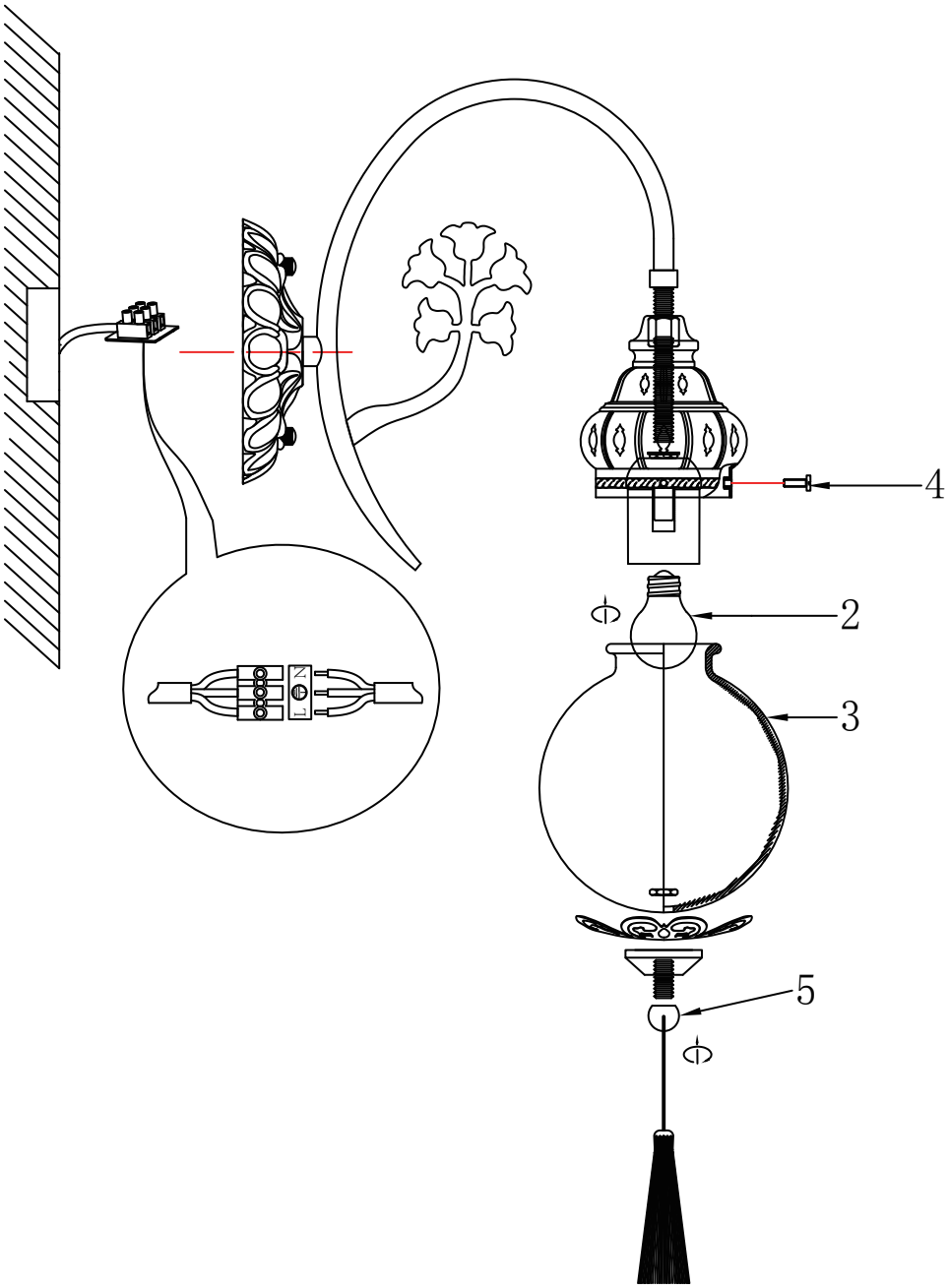

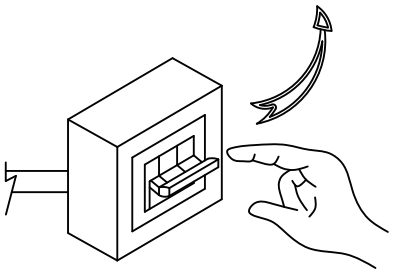

ON 6