ARTE LAMP

A1742AP-2BK

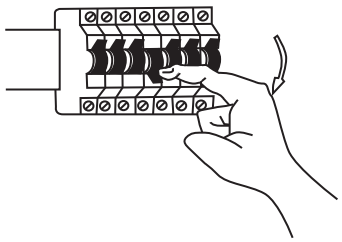

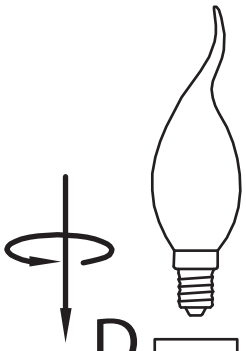

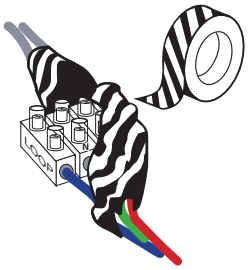

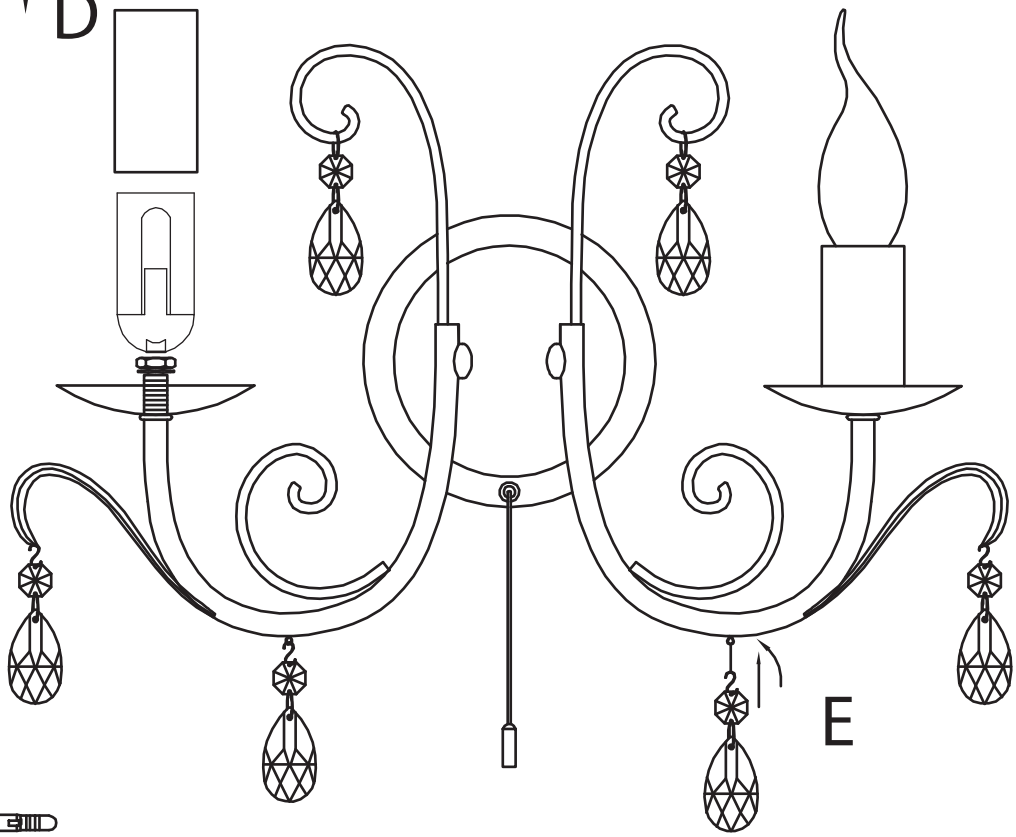

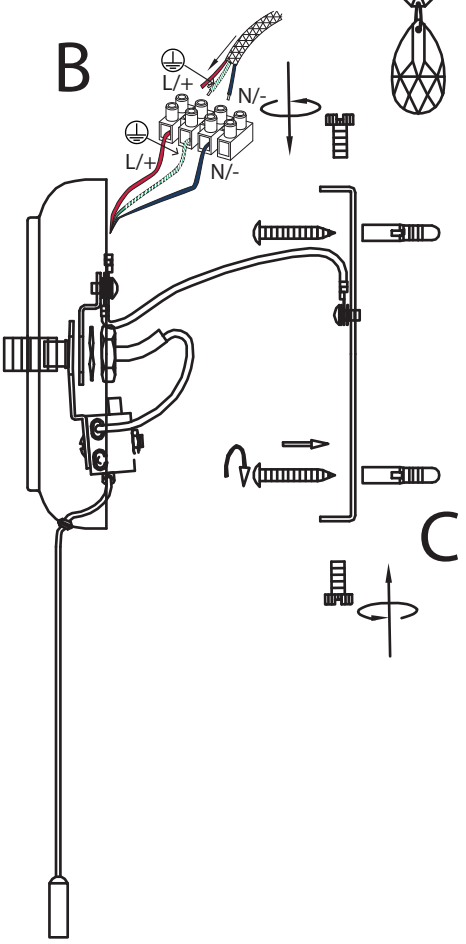

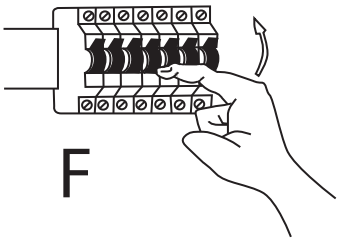

ART000106