ARTE LAMP

ASSEMBLY INSTRUCTION
ИНСТРУКЦИЯ

A
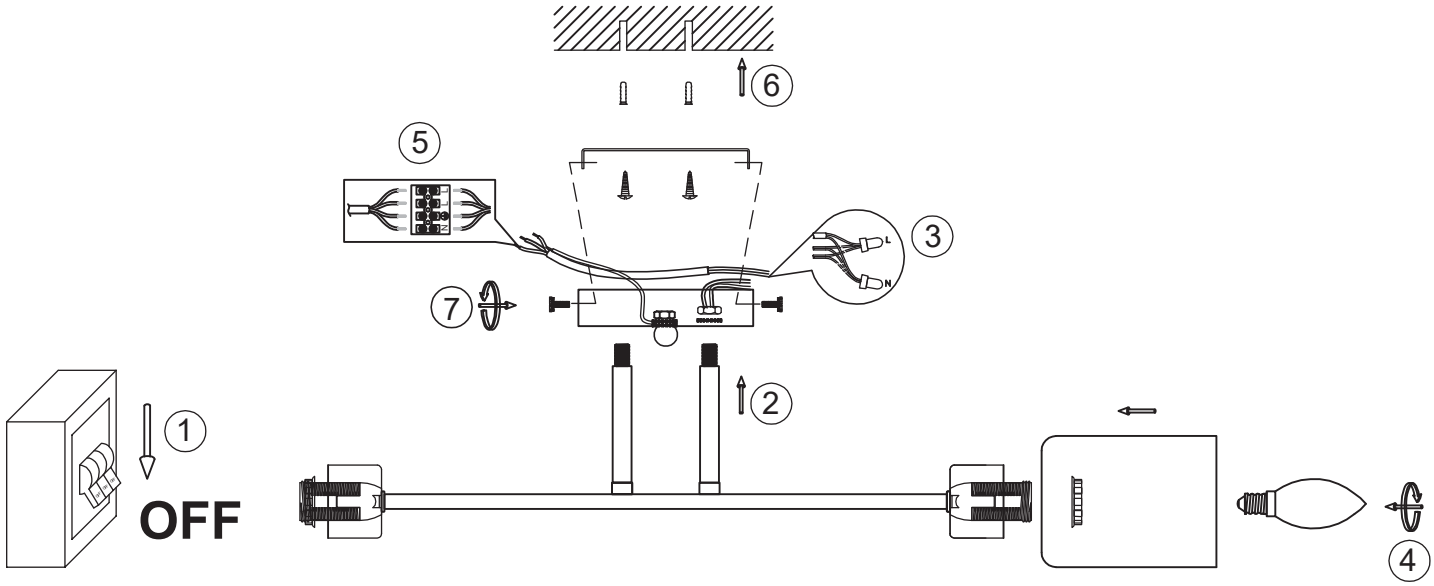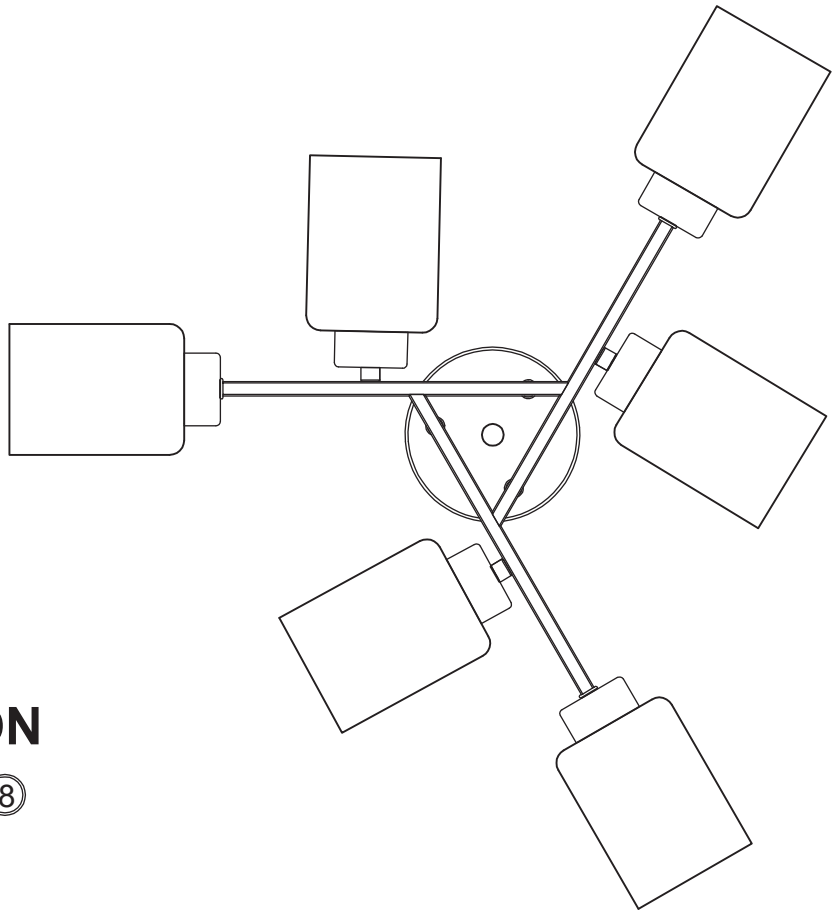
A1547PL-6BK