ARTE LAMP

ASSEMBLY INSTRUCTION

ИНСТРУКЦИЯ

A1524SP-1WH
A1524SP-1GY
A1524SP-1CC
A1524SP-1BK
A1530SP-1BK
A1530SP-1WH
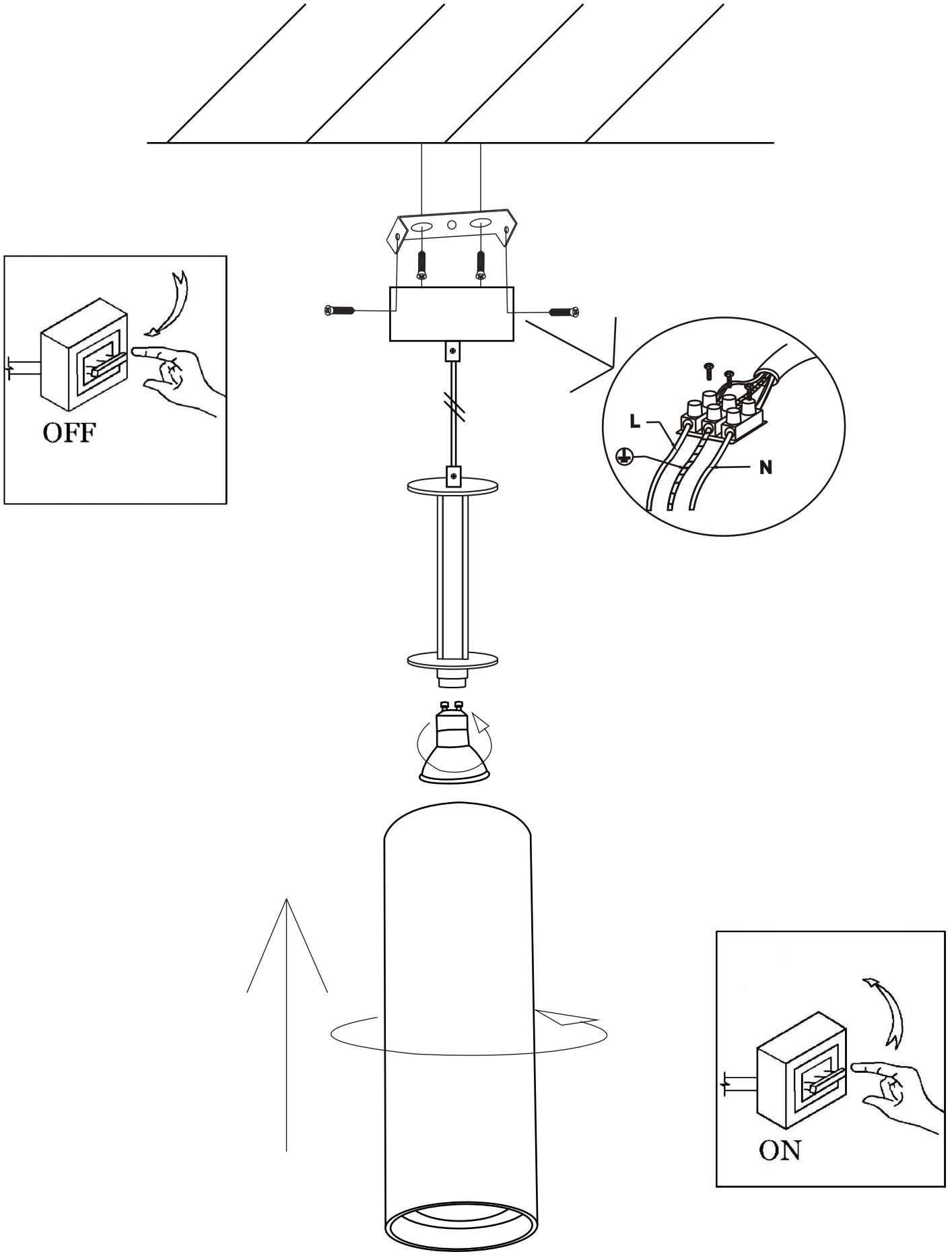
A