ARTE LAMP

ASSEMBLY INSTRUCTION

ИНСТРУКЦИЯ

A
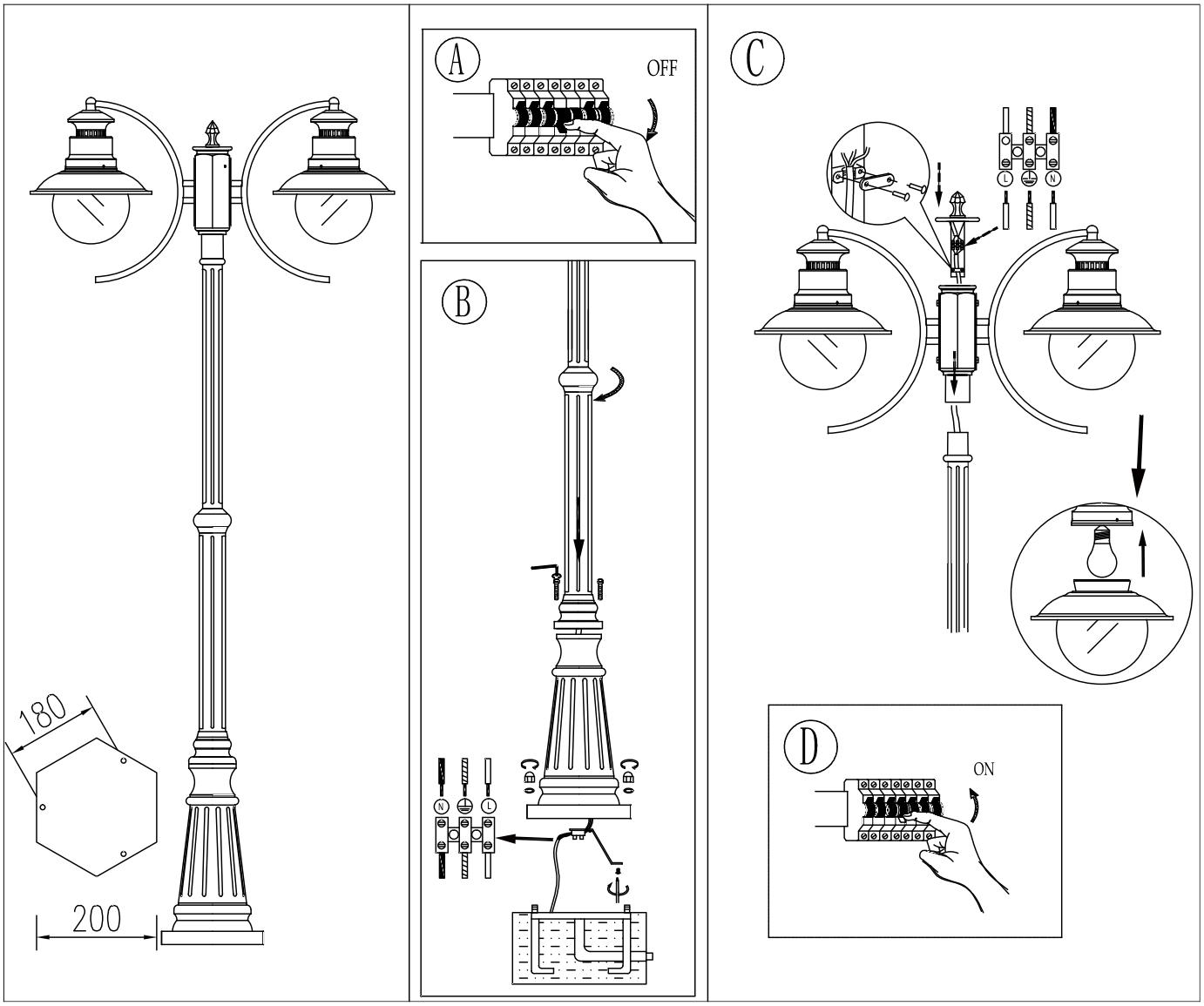
A1523PA-2