ARTE LAMP

ASSEMBLY INSTRUCTION
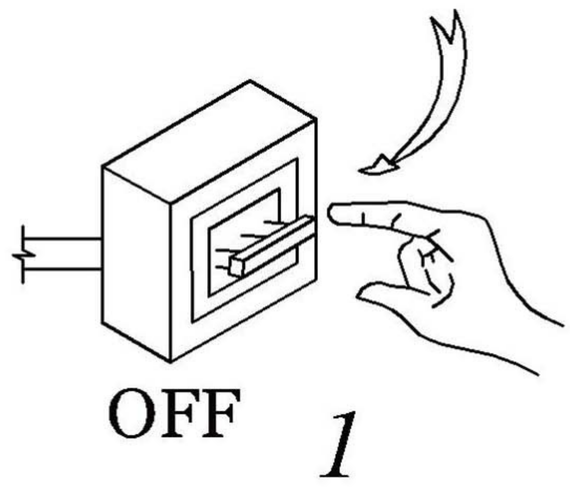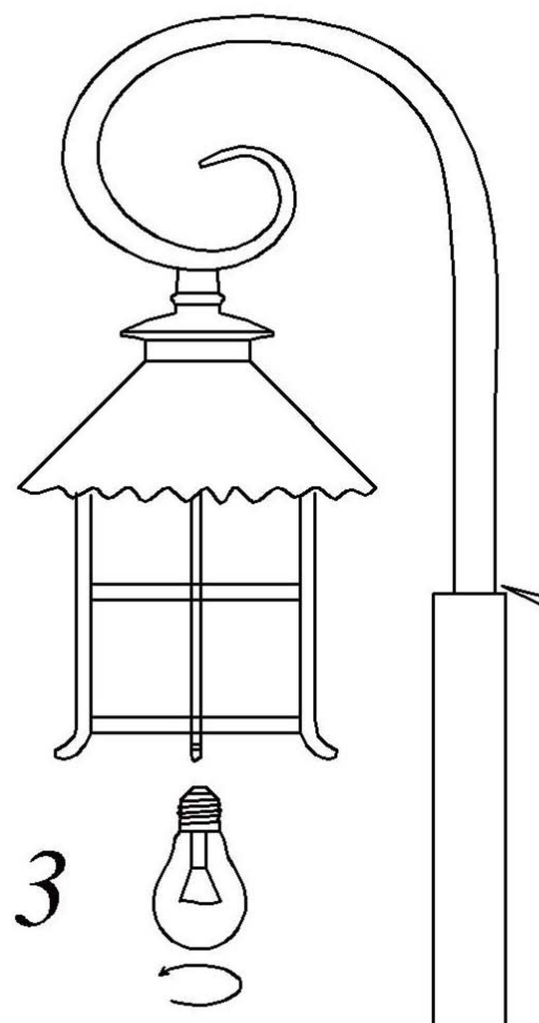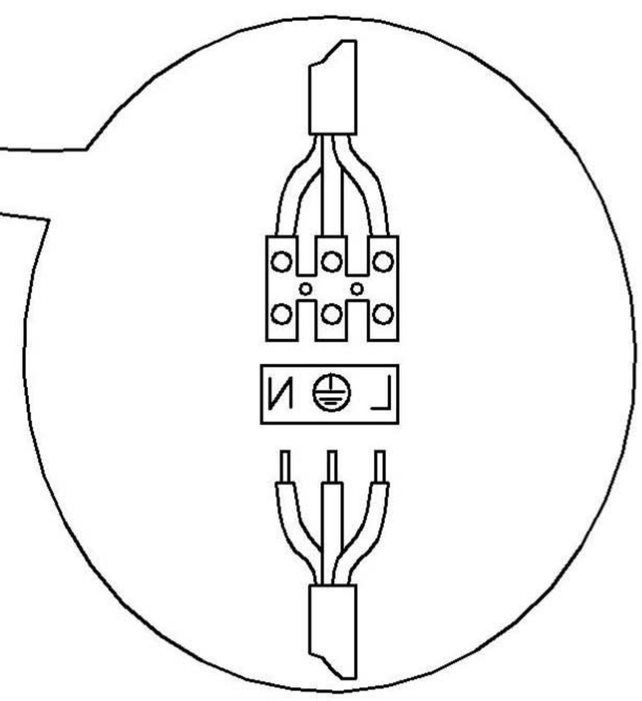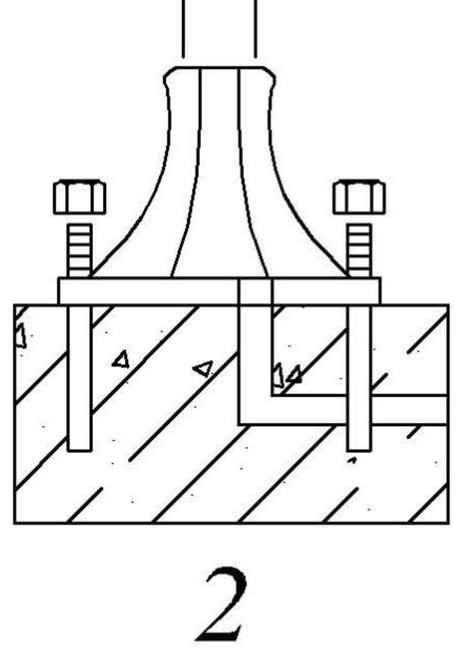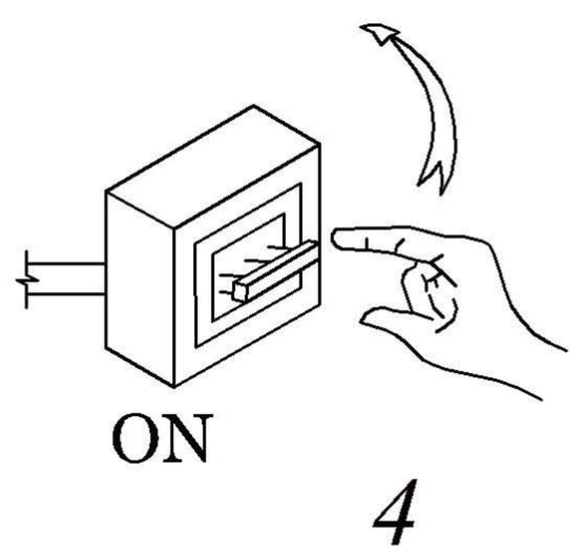
ИНСТРУКЦИЯ A1466PA-1WG