ARTE LAMP

ASSEMBLY INSTRUCTION
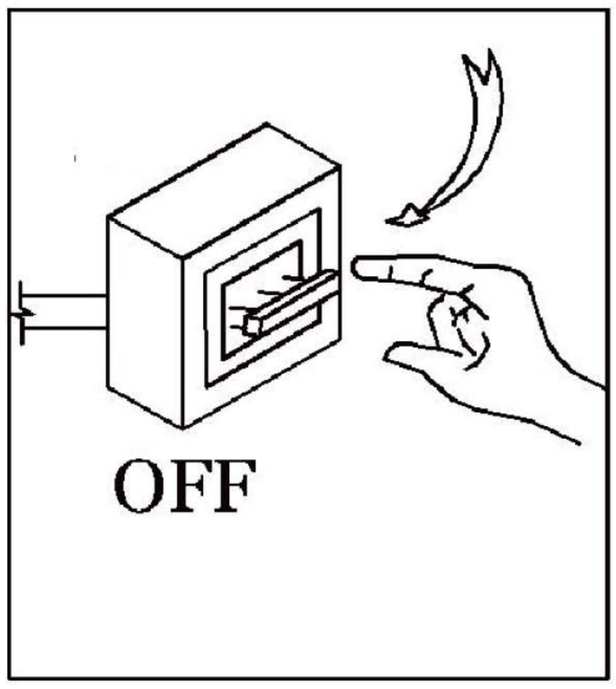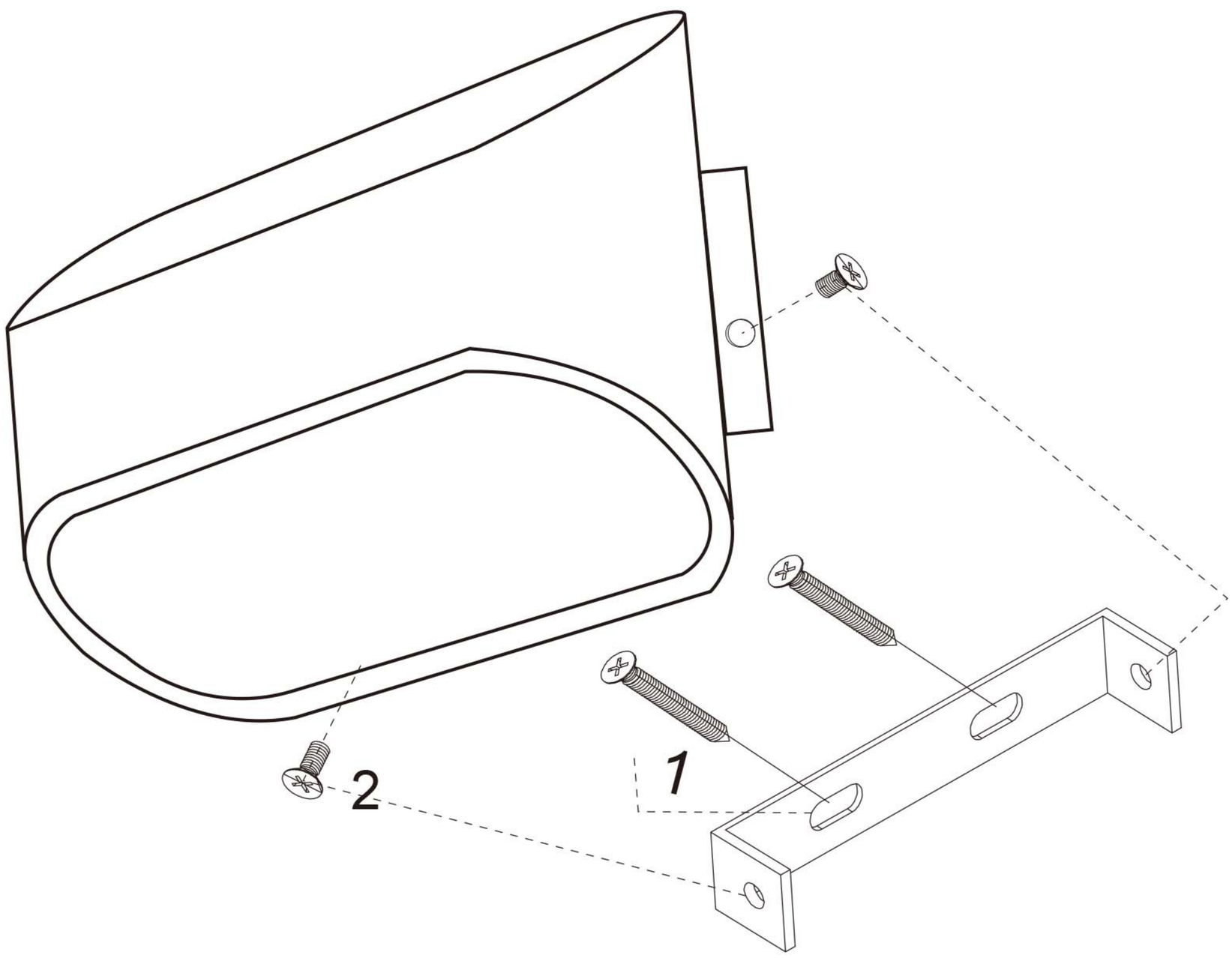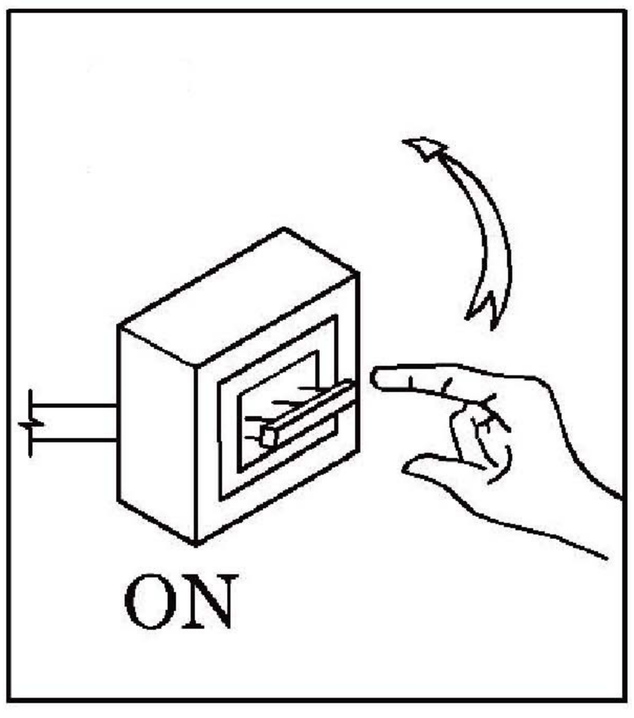
ИНСТРУКЦИЯ A1428AP-1WH