ARTE LAMP

ASSEMBLY INSTRUCTION

ИНСТРУКЦИЯ
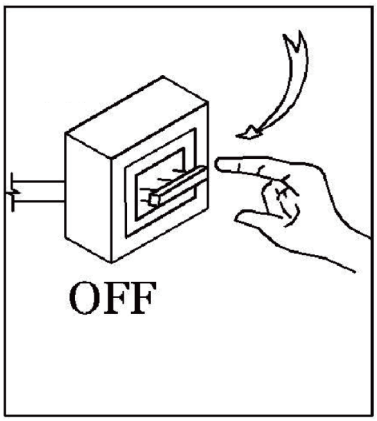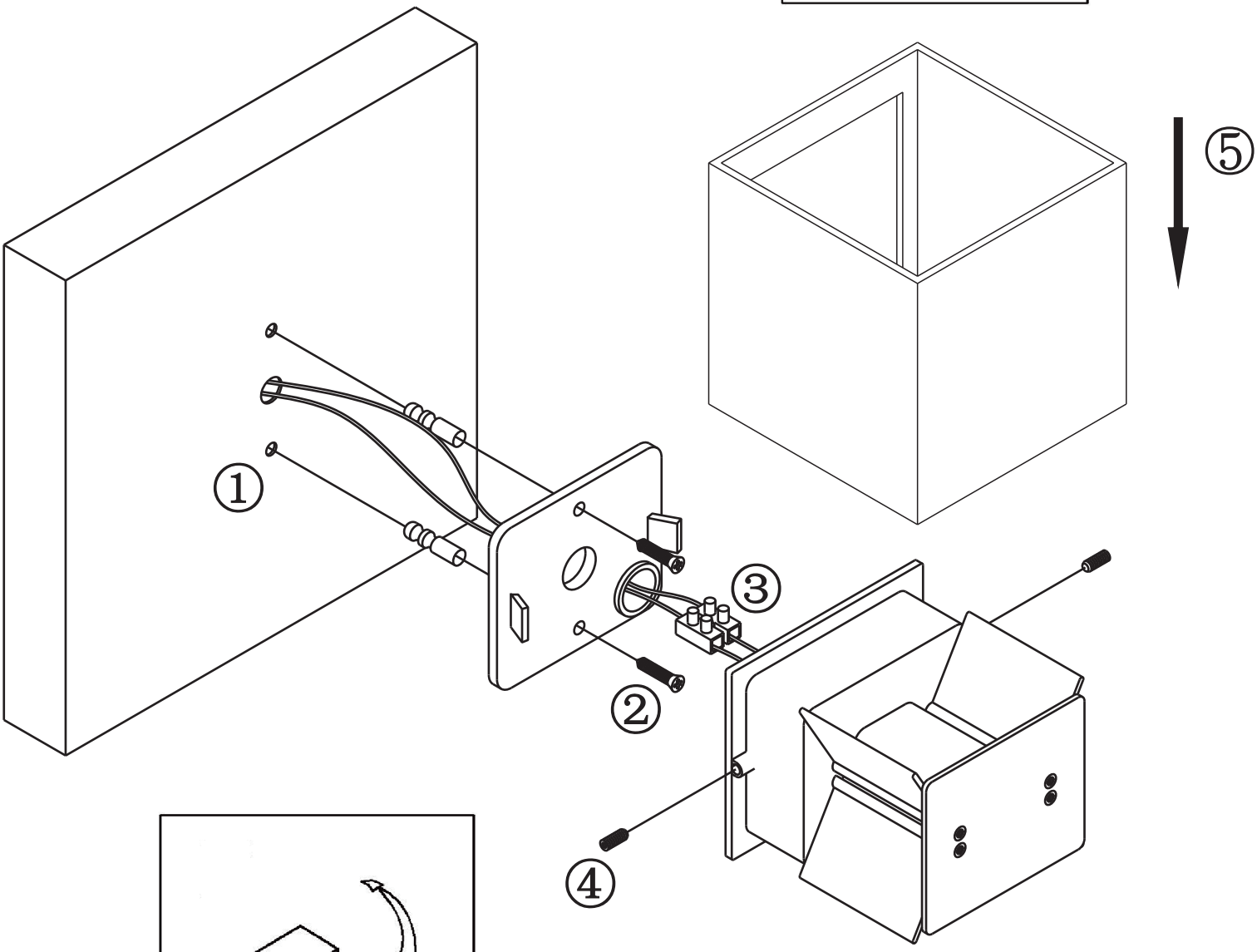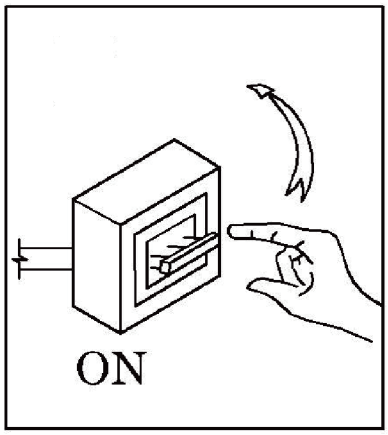
A1414AL-1WH
A1414AL-1GY