ARTE LAMP

ASSEMBLY INSTRUCTION
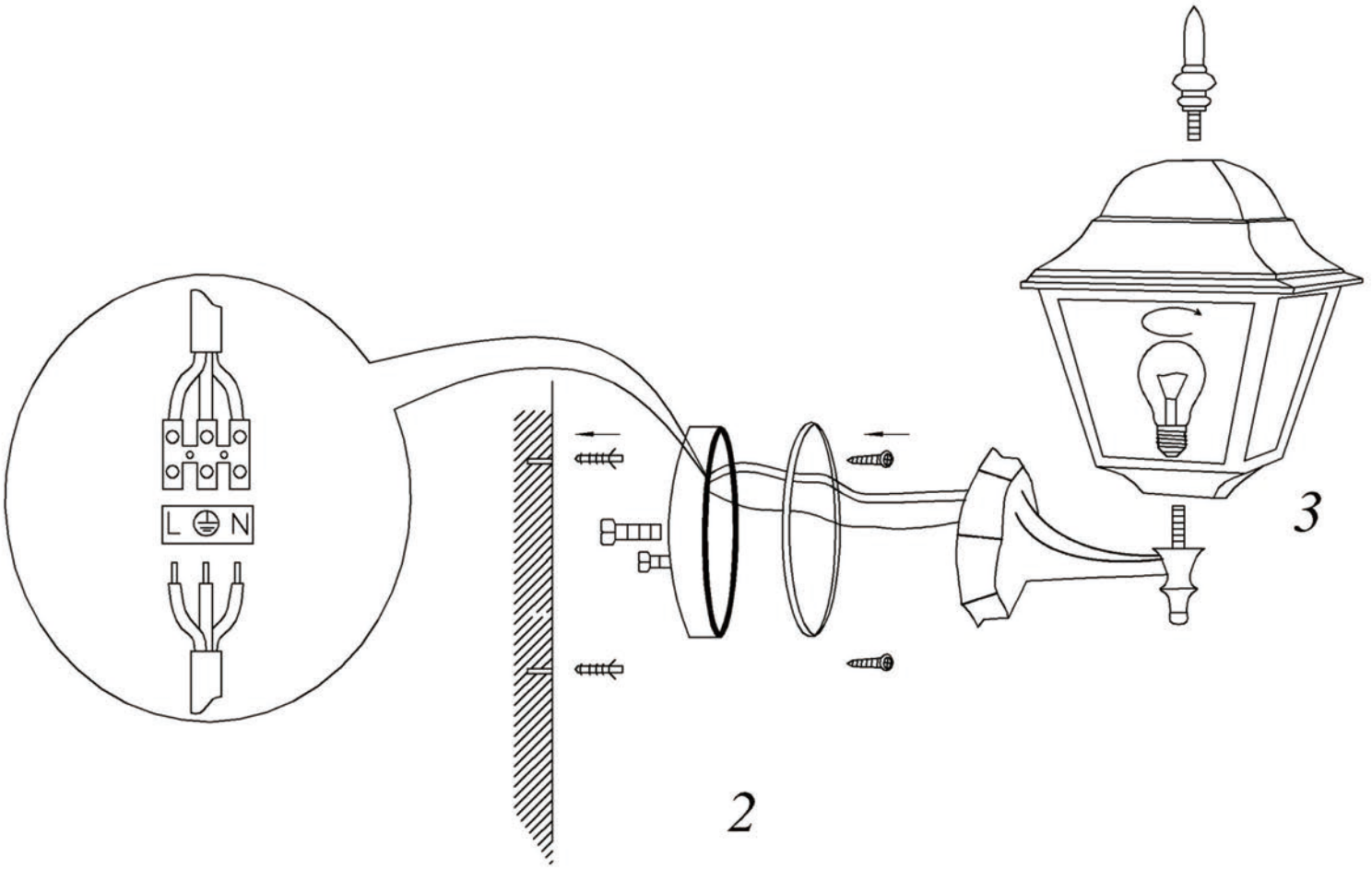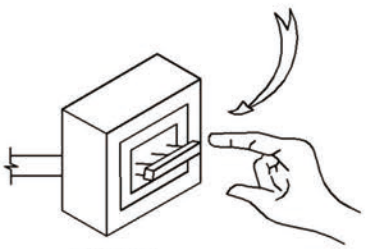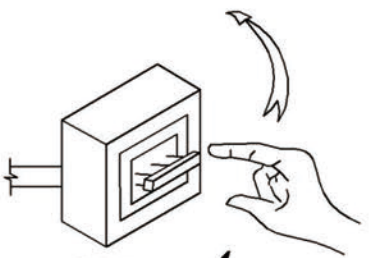
ИНСТРУКЦИЯ A1011AL-1WH