ASSEMBLY INSTRUCTION
ИНСТРУКЦИЯ
A1004PL-10SI

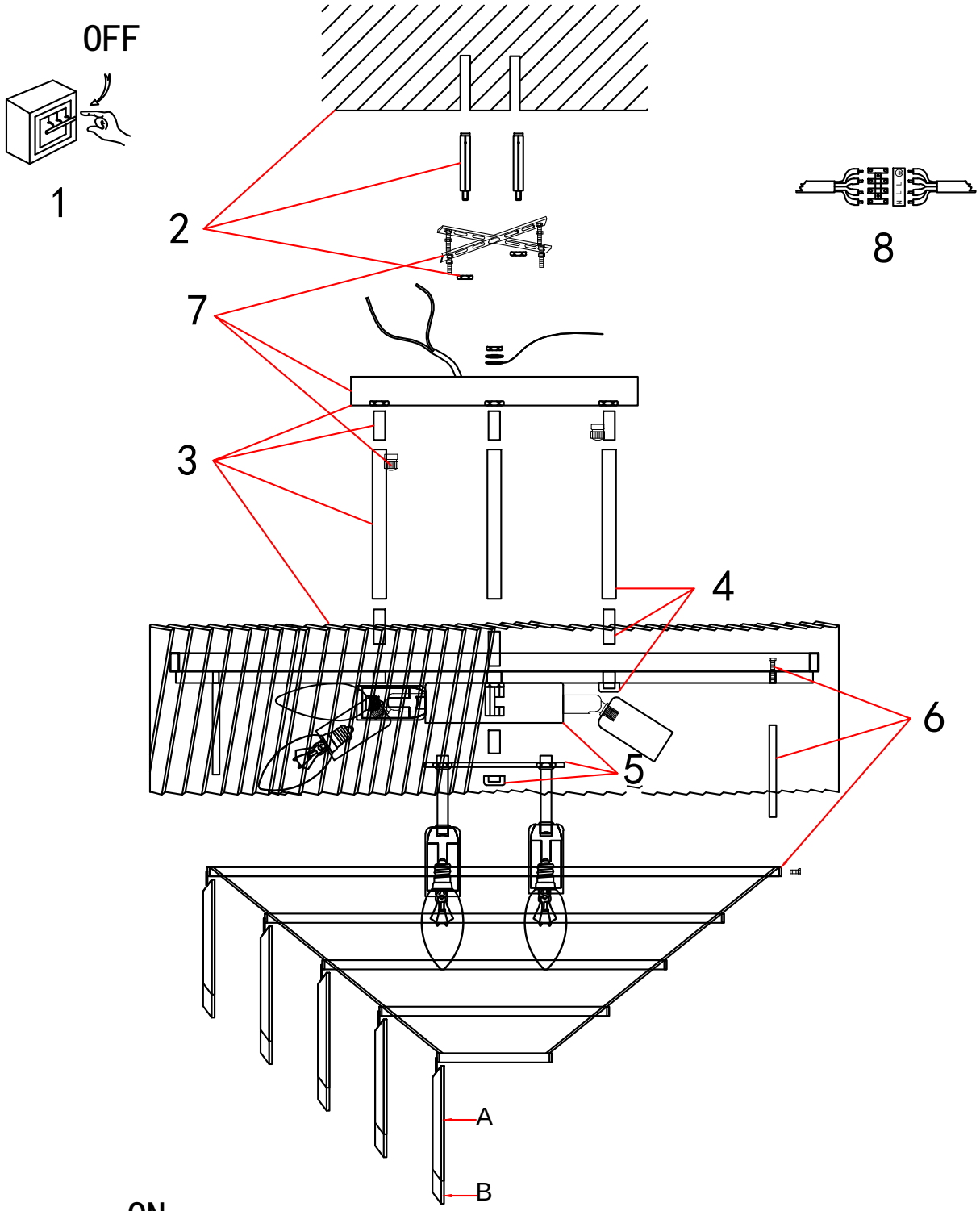

A:22*100: 79 PCS